ABBREVIATIONS

A/C	AIR CONDITIONING
ACT	ACOUSTICAL CEILING TILE
ADJ	ADJUSTABLE
AFF	ABOVE FINISHED FLOOR
AMP	AMPERE
ARCH	ARCHITECT
BOH	BACK OF HOUSE
CAB	CABINET
CFMF	COLD-FORMED METAL FRAMING
CL	CENTER LINE
CLG	CEILING
CM	STARBUCKS CONSTRUCTION MANAGER
CTR	CENTER
CX	COMMISSIONING
CXA	COMMISSIONING AGENT
DEG	DEGREE
DET	DETAIL
DIA	DIAMETER
DIM	DIMENSION
DM	STARBUCKS DESIGN MANAGER
DN	DOWN
EA	EACH
EL	ELEVATION
EQ	EQUAL
EXIST	EXISTING
EXT	EXTERIOR
FF&E	FURNITURE, FIXTURE, AND EQUIPMENT
FLR	FLOOR
FOH	FRONT OF HOUSE
FOIC	FURNISHED BY OWNER, INSTALLED BY CONTRACTOR
FOIO	FURNISHED BY OWNER INSTALLED BY OWNER
FT	FOOT/FEET
G	GROUND
GC	GENERAL CONTRACTOR
GWB	GYPSUM WALLBOARD
HC	HOLLOW CORE
HDW	HARDWARE
HM	HOLLOW METAL
HOP	HANDOFF PLANE
HORIZ	HORIZONTAL
HR	HOUR
HT	HEIGHT
HVAC	HEATING, VENTILATING AND AIR CONDITIONING
I.D.	INSIDE DIAMETER
LEED	LEADERSHIP IN ENERGY AND ENVIRONMENTAL DESIGN
LL	LANDLORD
LV	LOW VOLTAGE
MAX	MAXIMUM
MEP	"MECHANICAL, ELECTRICAL AND PLUMBING"
MFR	MANUFACTURER
MIN	MINIMUM
MOP	MOBILE ORDER PICK UP
NIC	NOT IN CONTRACT
NL	NIGHT LIGHT
NTS	NOT TO SCALE
OC	ON CENTER
O.D.	OUTSIDE DIAMETER
PIR	PASSIVE INFRARED SENSOR
PLC	PLACE
R	RADIUS
REF	REFERENCE
REQ'D	REQUIRED
REV	REVISION
RND	ROUND
SB	STARBUCKS
SC	SOLID CORE
SF	SQUARE FEET
SHT	SHEET
SIM	SIMILAR
SS	SOLID SURFACING MATERIAL
SST	STAINLESS STEEL
SPEC	SPECIFICATION
SQ	SQUARE
TEMP	TEMPORARY
TYP	TYPICAL
UC	UNDER COUNTER
UNO	UNLESS NOTED OTHERWISE
VERT	VERTICAL
VIF	VERIFY IN FIELD

RESPONSIBILITY LEGEND

GC	GENERAL CONTRACTOR
LL	LANDLORD
SB	STARBUCKS
CV	CASEWORK VENDOR

ARCHITECTURAL SYMBOL LEGEND

N — NORTH ARROW

0 2 4 8 Scale: X =X — GRAPHIC SCALE

DATUM POINT

EXTERIOR ELEVATION CALL-OUT

INTERIOR ELEVATION CALL-OUT

SECTION CALL-OUT

DETAIL CALL-OUT

XX — SHEET NOTE CALLOUT

XXXX AFF — ABOVE FINISH FLOOR HEIGHT TAG

X' XX" — FINISH FACE TO FINISH FACE DIMENSION

REVISION CLOUD

X — REVISION TAG

PT XXXXX — PAINT TAG

X XXXXX — DESIGN ID TAG

D XXXXX XX — DOOR TAG

W XXXXX — WINDOW TAG

X-X-X — INTERIOR WALL TAG

AERIAL MAP

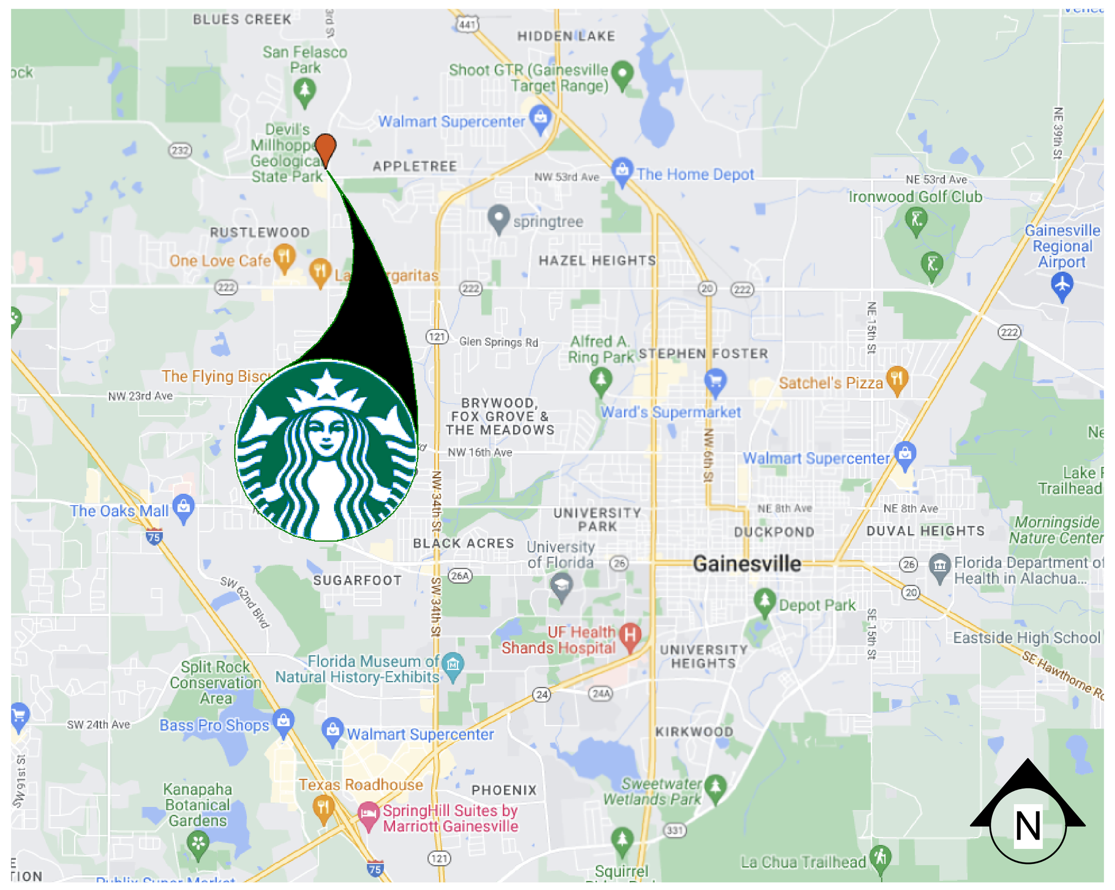

VICINITY PLAN

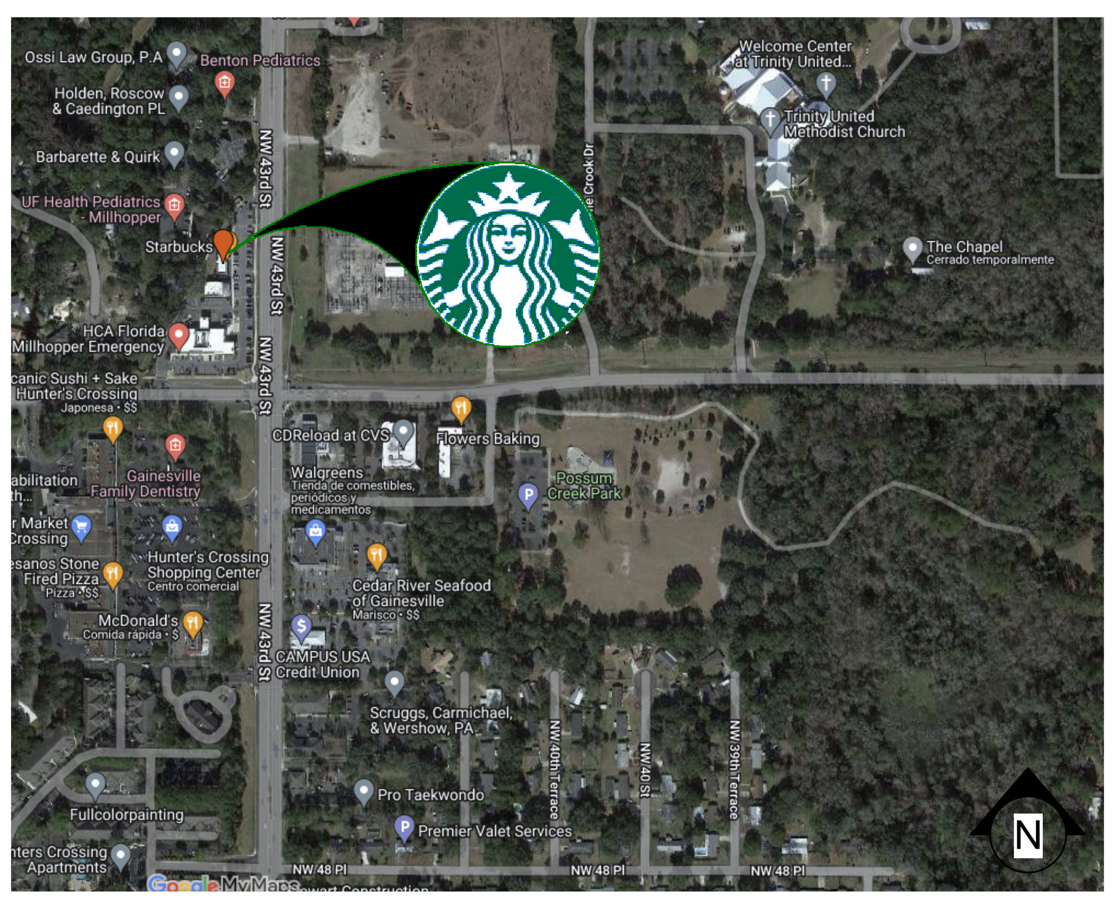

PROJECT CONTACTS

MAILING ADDRESS:	STARBUCKS COFFEE COMPANY 2401 UTAH AVENUE SOUTH MS STOP: S-SD10 SEATTLE, WASHINGTON 98134 (206) 318-1575
SENIOR DESIGN MANAGER:	LUCAS ALVAREZ-TABIO STARBUCKS COFFEE COMPANY 99 MERRICK WAY, SUITE 650 CORRAL GABLES, FL 33134 (786) 769-7966 PHONE LALVAREZ@STARBUCKS.COM
DESIGN MANAGER:	ROMINA VIGNOLO STARBUCKS COFFEE COMPANY 99 MERRICK WAY, SUITE 650 CORRAL GABLES, FL 33134 (305) 529-5359 PHONE RVIGNOLO@STARBUCKS.COM
DESIGN & SUBMITTALS:	MARTIN PEREZ GENSLER CHAPULTEPEC UNO REFORMA 509, PISO 26 CUAUHTÉMOC, 06500 CDMX, MÉXICO MARTIN_PEREZ@GENSLER.COM SBUX-SUBMITTALS@GENSLER.COM
CONSTRUCTION MANAGER:	LYLE KRUMLAUF STARBUCKS COFFEE COMPANY (401) 607-8685 LKRUMLAUSTARBUCKS.COM ANTHONY GRATTO 352-281-4900 AGRATTO@STARBUCKS.COM
LANDLORD:	SSS INVESTMENTS OF JACKSONVILLE-INC 6740 EPPING FOREST WAY NORTH UNIT-1107 JACKSONVILLE, FL 32217, USA
ARCHITECT OF RECORD:	M. ARTHUR GENSLER JR. & ASSOCIATES FL. LIC. N AR96486 545 NW 26TH ST. SUITE 250 MIAMI, FLORIDA 33127 CONTACT: PABLO G. GARCÍA PABLO_GARCIA@GENSLER.COM
MEP CONSULTANT OF RECORD:	SCHNACKEL ENGINEERS, INC 80 SOUTH LAKE AVENUE, SUITE 650 PASADENA, CA 91101, USA (626) 486-0246 | (626) 714-3300 | (626) 676-2021 CONTACT: JAE LEE JLEE@SCHNACKEL.COM
STRUCTURAL CONSULTANT:	BLISS & NYTRAY, INC 10440 N. CENTRAL EXPRESSWAY SUITE 1530 DALLAS, TX 75231, USA (214) 432-8232 PHONE A-PHELPS@BNIENGINEERS.COM

SCOPE OF WORK

TENANT IMPROVEMENTS OF AN EXISTING GROUND FLOOR CAFE SPACE:

1. EXPAND ENGINE AND ADD STORAGE ROOM.
2. NEW FINISHES AT CAFE BAR
3. NEW EXTERIOR OUTLETS AND FURNITURE
4. NEW EXTERIOR PRIVACY SCREEN AND GREEN WALL REMOVAL
5. NEW DRIVE THRU SIGNAGE

CLASSIFICATION OF WORK: ALTERATION LEVEL 2, PER FBC - EXIST. BUILDING SECTION 404.

BUILDING INFORMATION

OCCUPANCY TYPE:	ASSEMBLY A-2
TYPE OF USE:	CAFETERIA / SIMILAR DINING FACILITIES
NUMBER OF STORIES:	1 (EXISTING)
BUILDING AREA:	2314 SQ.FT.
TENANT AREA:	1970 SQ.FT. (ENCLOSED) + 344 SQ.FT. (PATIO)
TYPE OF CONSTRUCTION:	IIB, UNPROTECTED
INTERIOR FINISHES	WALLS AND CEILING CLASS C FLOORS CLASS C
FIRE SPRINKLER:	NON-SPRINKLERED (EXISTING)
FIRE ALARM:	YES (EXISTING)

GENERAL NOTES

1. THE DRAWINGS AND PROJECT MANUAL TOGETHER CONSTITUTE THE CONTRACT DOCUMENTS FOR CONSTRUCTION. ALL GENERAL REQUIREMENTS ARE TO BE MET AND ALL MATERIALS, FINISHES AND SYSTEMS ARE TO BE INSTALLED AND PERFORM PER SPECIFICATIONS UNLESS OTHERWISE NOTED.
2. GENERAL CONTRACTOR SHALL VISIT THE SITE, REVIEW THE BUILDING SHELL DRAWINGS AS SUBMITTED BY THE LANDLORD OR STARBUCKS AND BECOME THOROUGHLY FAMILIAR WITH THE SITE CONDITIONS PRIOR TO CONSTRUCTION.
3. GENERAL CONTRACTOR SHALL CONSULT WITH STARBUCKS CONSTRUCTION MANAGER TO RESOLVE ANY CHANGES, OMISSIONS OR PLAN DISCREPANCIES PRIOR TO CONSTRUCTION.
4. ALL WORK SHALL BE PERFORMED IN STRICT COMPLIANCE WITH LOCAL, COUNTY, STATE AND FEDERAL CODES AND ORDINANCES.
5. GENERAL CONTRACTOR SHALL VERIFY THE LOCATION OF ALL UTILITIES.
6. GENERAL CONTRACTOR TO VERIFY ALL DIMENSIONS, INCLUDING CLEARANCES REQUIRED BY OTHER TRADES AND NOTIFY STARBUCKS CONSTRUCTION MANAGER OF ANY DISCREPANCIES PRIOR TO PROCEEDING WITH THE WORK. ALL DIMENSIONS ARE TO THE FACE OF THE FINISHED SURFACE UNLESS NOTED OTHERWISE. ALL DIMENSIONS TO BE TAKEN FROM DESIGNATED DATUM POINT. DO NOT SCALE DRAWINGS.
7. GENERAL CONTRACTOR SHALL PATCH AND REPAIR ALL EXISTING WALLS, FLOORS, CEILINGS, OR OTHER SURFACES IDENTIFIED TO REMAIN THAT MAY BECOME DAMAGED DURING THE COURSE OF THE WORK.
8. THE GENERAL CONTRACTOR IS RESPONSIBLE FOR OBTAINING PERMITS FOR FIRE PROTECTION, PLUMBING, MECHANICAL, AND ELECTRICAL SYSTEMS PRIOR TO INSTALLATION OF SUCH SYSTEMS.
9. GENERAL CONTRACTOR SHALL RETAIN ONE SET OF PERMIT PLANS ON-SITE TO DOCUMENT ALL CHANGES MADE DURING CONSTRUCTION. THE RECORD DRAWINGS SHALL BE ISSUED TO THE OWNER AT PROJECT CLOSE-OUT AS DESCRIBED IN THE GENERAL REQUIREMENTS OF THE PROJECT MANUAL.
10. GENERAL CONTRACTOR IS RESPONSIBLE FOR COORDINATING DELIVERY OF MATERIALS FROM STARBUCKS CONTRACTED THIRD PARTY LOGISTICS DISTRIBUTION SERVICES AND VENDOR DIRECT SHIPMENTS. SEE THE PROJECT MANUAL FOR ADDITIONAL INFORMATION.
11. RESPONSIBILITY FOR SUPPLY AND DELIVERY OF MATERIALS AND EQUIPMENT IS IDENTIFIED IN THE DRAWING SCHEDULE SHEETS UNDER THE COLUMN LABELED "RESPONSIBILITY".
12. FOR THE PURPOSE OF THE DOCUMENTS, TO "INSTALL", SHALL MEAN TO PROVIDE ALL FASTENERS, MISCELLANEOUS HARDWARE, BLOCKING, ELECTRICAL CONNECTIONS, PLUMBING CONNECTIONS AND OTHER ITEMS REQUIRED FOR A COMPLETE AND OPERATIONAL INSTALLATION, UNLESS OTHERWISE NOTED.
13. ALL ITEM SUBSTITUTIONS MUST BE APPROVED BY THE STARBUCKS CONSTRUCTION MANAGER.
14. STARBUCKS WILL PROVIDE THE PROJECT MANUAL AND SPECIFICATIONS FOR THIS PROJECT.

APPLICABLE CODES

FLORIDA BUILDING CODES		
FBC	BUILDING, 8TH EDITION	2023
FBCEB	EXISTING BUILDING, 8TH EDITION	2023
FBCEC	ENERGY CONSERVATION, 8TH EDITION	2023
FBCP	PLUMBING, 8TH EDITION	2023
FBCM	MECHANICAL, 8TH EDITION	2023
NATIONAL FIRE PROTECTION ASSOCIATION		
NPFA 1	FIRE CODE, FLORIDA FIRE PREVENTION CODE, 8TH EDITION	2021
NFPA 101	LIFE SAFETY CODE, FLORIDA FIRE PREVENTION CODE, 8TH EDITION	2021
NFPA-70 (NEC)	NATIONAL ELECTRICAL CODE	2020
ACCESIBILITY GUIDELINES		
ADA	ADA STANDARDS FOR ACCESIBLE DESIGN BY THE U.S. DEPARTMENT OF JUSTICE	2010
FBCA	ACCESIBILITY, 8TH EDITION	2023
ICC/ANSI 117.1	ACCESIBLE AND USABLE BUILDINGS AND FACILITIES	2017
ADDITIONAL GUIDELINES		
ASHRAE 90.1	ANSI/ASHRAE/IES STANDARD 90.1	2016

ZONING INFORMATION

ZONING:

PARCEL NUMBER:	06023-001-002
LEASABLE AREA:	1970 SQ.FT.
PROPOSED USE:	RESTAURANT (COFFEE SHOP) / RETAIL SALES AND SERVICES
ZONNING TYPE:	MU-1 (NO SPECIAL DESIGN OR OVERLAY DISTRICTS)

JURISDICTION:

CITY OF GAINESVILLE
200 E UNIVERSITY AVE
GAINESVILLE, FL 32601
(352) 625-2073 PHONE

DEFERRED SUBMITTALS: HEALTH
LOW VOLTAGE

INDEX OF SHEETS

LEGEND: X - SHEET ISSUED
R - SHEET ISSUED FOR REFERENCE AND COORDINATION ONLY
SEE TITLEBLOCK FOR REVISION ISSUE DATE(S)

SHEET	SHEET TITLE	CONSTRUCTION REVIEW SET	PERMIT SET	REVISION 1	REVISION 2	REVISION 3	REVISION 4
GENERAL							
G001	GENERAL INFORMATION	X	X				
G002	LIFE SAFETY PLAN	X	X				
G003	FOOD SERVICE AND ACCESSIBILITY PLAN	X	X				
G004	ACCESSIBILITY GUIDELINES	X	X				
G004.1	ACCESSIBILITY GUIDELINES	X	X				
G005	PERSPECTIVE VIEWS	X	X				
DEMOLITION							
D101	DEMOLITION FLOOR PLAN	X	X				
D102	DEMO REFLECTED CEILING PLAN	X	X				
D201	DEMO EXTERIOR ELEVATIONS	X	X				
ARCHITECTURAL							
A001	ARCHITECTURAL SITE PLAN	X	X				
A002	ARCHITECTURAL SITE ENLARGED	X	X				
A003	ROOF PLAN	X	X				
A101	BUILDING FLOOR PLAN	X	X				
A102	BUILDING FLOOR PENETRATION PLAN	X	X				
A501	WALL FRAMING DETAILS	X	X				
A502	BUILDING DETAILS	X	X				
A601	WINDOW AND DOOR SCHEDULES & DETAILS	X	X				
INTERIORS							
I101	FF & E PLAN	X	X				
I101.1	ENLARGED FF & E	X	X				
I102	CASEWORK PLAN	X	X				
I102.1	ADAPTABLE CASEWORK BASE PLAN	X	X				
I102.2	ADAPTABLE CASEWORK FRAMEWORK PLAN	X	X				
I102.3	ADAPTABLE CASEWORK CABINET PLAN	X	X				
I102.4	ADAPTABLE CASEWORK COUNTERTOP PLAN	X	X				
I103	REFLECTED CEILING PLAN	X	X				
I103.1	DIMENS. REFLECTED CEILING PLAN	X	X				
I103.2	REFLECTED CEILING PLAN REFERENCE	X	X				
I104	FLOOR FINISH PLAN	X	X				
I105	WALL FINISH PLAN	X	X				
I201	INTERIOR FINISH ELEVATIONS	X	X				
I202	INTERIOR FINISH ELEVATIONS	X	X				
I203	INTERIOR FINISH ELEVATIONS	X	X				
I501	ADAPTABLE CASEWORK DETAILS	X	X				
I501.1	ADAPTABLE CASEWORK SECTIONS	X	X				
I502	CASEWORK DETAILS	X	X				
I503	CASEWORK DETAILS	X	X				
I505	RCP DETAILS	X	X				
I506	RCP DETAILS	X	X				
I507	FLOOR FINISH DETAILS	X	X				
I508	FLOOR FINISH DETAILS	X	X				
I509	WALL FINISH DETAILS	X	X				
I510	MENU BOARD	X	X				
I511	ARTWORK	X	X				
I511.1	ARTWORK	X	X				
I601	CASEWORK AND FF&E SCHEDULES	X	X				
I602	INTERIOR FINISHES SCHEDULES	X	X				
STRUCTURAL							
S1.00	STRUCTURAL NOTES	X	X				
S2.00	SLAB ON GRADE PLAN & DETAILS	X	X				
S3.01	LIGHT GAUGE DETAILS	X	X				
ELECTRICAL							
E001	ELECTRICAL LEGEND	X	X				
E100	ELECTRICAL SITE PLAN	X	X				
E101	POWER PLAN	X	X				
E102	ENLARGED POWE AND SYSTEM PLANS	X	X				
E103	LIGHTING PLAN	X	X				
E104	VENTAR CONTROL DIAGRAMS	X	X				
E501	ELECTRICAL DETAILS	X	X				
E502	ELECTRICAL DETAILS	X	X				
E503	ELECTRICAL DETAILS	X	X				
E601	ELECTRICAL PANEL SCHEDULES	X	X				
MECHANICAL							
M101	MECHANICAL DESIGN PLAN	X	X				
M501	MECHANICAL DETAILS	X	X				
M601	MECHANICAL DETAILS	X	X				
PLUMBING							
P001	PLUMBING SCHEDULES	X	X				
P101	PLUMBING SUPPLY PLAN	X	X				
P102	PLUMBING WASTE & VENT PLAN	X	X				
P103	ENLARGED PLUMBING PLACEMENT PLAN	X	X				
P201	PLUMBING DETAILS	X	X				
P301	PLUMBING RISER DIAGRAM	X	X				
P302	PLUMBING RISER DIAGRAM	X	X				

PERMIT SET - FOR CONSTRUCTION USE

© 2022 STARBUCKS COFFEE COMPANY

STARBUCKS®
2401 UTAH AVENUE SOUTH
SEATTLE, WASHINGTON 98134
(206) 318-1575

THESE DRAWINGS AND THE PROJECT MANUAL ARE CONFIDENTIAL AND SHALL REMAIN THE SOLE PROPERTY OF STARBUCKS CORPORATION, WHICH IS THE OWNER OF THE COPYRIGHT IN THIS WORK. THEY SHALL NOT BE REPRODUCED (IN WHOLE OR IN PART), SHARED WITH THIRD PARTIES OR USED IN ANY MANNER ON OTHER PROJECTS OR EXTENSIONS TO THIS PROJECT WITHOUT THE PRIOR WRITTEN CONSENT OF STARBUCKS CORPORATION. THESE DRAWINGS AND SPECIFICATIONS ARE INTENDED TO EXPRESS DESIGN INTENT FOR A PROTOTYPICAL STARBUCKS STORE (WHICH IS SUBJECT TO CHANGE AT ANYTIME) AND DO NOT REFLECT ACTUAL SITE CONDITIONS. NEITHER PARTY SHALL HAVE ANY OBLIGATION NOR LIABILITY TO THE OTHER (EXCEPT STATED ABOVE) UNTIL A WRITTEN AGREEMENT IS FULLY EXECUTED BY BOTH PARTIES.

STARBUCKS TEMPLATE VERSION: i2024.01.01

PABLO GARCIA, AIA, REG. FL NO. AR99297

Gensler

MAIN OFFICE
M. ARTHUR GENSLER JR. & ASSOCIATES
FL QUALIFIER'S LIC. NO. AR96486
45 FREMONT ST, SUITE 1500
SAN FRANCISCO, CA 94105 USA
Tel (415) 433.3700
Fax (415) 836.4599

SATELLITE OFFICE
M. ARTHUR GENSLER JR. & ASSOCIATES
545 NW 26TH ST
SUITE 250
MIAMI, FL 33127 USA
Tel (305) 350.7070
Fax (305) 350.7071

PROJECT NAME:
NW 43RD & 53RD

PROJECT ADDRESS:
5480 NW 43RD STREET
GAINESVILLE, FL 32653

STORE #:	10820
PROJECT #:	34769-081
ISSUE DATE:	03-22-2024
DESIGN MANAGER:	ROMINA VIGNOLO
PRODUCTION DESIGNER:	GENSLER
CHECKED BY:	GENSLER

Revision Schedule

Rev	Date	By	Description

SHEET TITLE:
GENERAL INFORMATION

SCALE: AS SHOWN

SHEET NUMBER:
G001

INDOOR SEATING CALCULATIONS

DESCRIPTION	NUMBER OF ITEMS	SEATS	PER ITEM
COMMUNITY TABLE	1	6 SEATS	6
BANQUETTE	1	22 SEATS	22
SOFT SEATING	3	2 SEATS	6
		TOTAL ACCESSIBLE SEATS (≥ 5%)	2
		TOTAL	34

OUTDOOR SEATING CALCULATIONS

DESCRIPTION	NUMBER OF ITEMS	SEATS	PER ITEM
TABLE TOP, SQUARE	8	2 SEATS	16
TABLE TOP, ROUND	4	2 SEATS	8
		TOTAL ACCESSIBLE SEATS (≥ 5%)	2
		TOTAL	24

EGRESS CALCULATIONS

EXIT WIDTH REQUIRED - 96 OCC. x 0.2	= 19.2 IN.
EXIT WIDTH PROVIDED	= 142 IN.
EXITS	= 68 IN. PRIMARY ENTRY, 34 IN. SECONDARY ENTRY, 40 IN WORKROOM
NUMBER OF EXITS REQUIRED	= 2
NUMBER OF EXITS PROVIDED	= 3
MAXIMUM. ALLOWABLE TRAVEL DISTANCE	= 200' - 00" (WITHOUT SPRINKLER, PER TABLE 1017.2)
MAXIMUM. TRAVEL DISTANCE PROVIDED	= 80' - 00"
MAXIMUM ALLOWABLE COMMON PATH OF EGRESS	= 75' - 00" (WITHOUT SPRINKLER, PER TABLE 1006.2.1)
MAXIMUM COMMON PATH OF EGRESS PROVIDED	= 34' - 00"
MINIMUM. EXIT SEPARATION	= 84' - 7" (MAXIMUM DIAGONAL) / 2 = 42' - 3"
EXIT SEPARATION PROVIDED	= 52' - 2"

PLUMBING FIXTURE CALCULATIONS

2023 FL BUILDING CODE - PLUMBING, TABLE 403.1.

OCCUPANCY	MALE	FEMALE	TOTAL	72 OCCUPANTS + 24 EXTERIOR SEATS = 96 OCCUPANTS			
	48 OCC.	48 OCC.	96 OCC.***				
FIXTURES	WATER CLOSETS			LAVATORY		WATER FOUNTAIN**	OTHER
	1 PER 75			1 PER 200		1 PER 500	1 SERVICE SINK
REQUIRED	1 M	1 F		1 M	1 F	1	1
PROVIDED	1 M	1 F		1 M	1 F	0**	1

*IN EACH BATHROOM OR TOILET ROOM, URINALS SHALL NOT BE SUBSTITUTED FOR MORE THAN 67% OF THE REQUIRED WATER CLOSETS IN ASSEMBLY OCCUPANCIES.

**RETAIL ESTABLISHMENT SERVES WATER UPON REQUEST.

***OCCUPANT TOTAL INCLUDES 24 PATIO OCCUPANTS.

OCCUPANCY CALCULATIONS

TYPE	Name	AREA	LINEAR	OCC. FACTOR	OCC. LOAD
EXTERIOR					
A-2	OUTDOOR SEATING	343 SF		15	24
		343 SF			24
INTERIOR					
A-2	BAR	479 SF		200	3
A-2	CAFE RETAIL	34 SF		5	7
A-2	CAFE SEATING	178 SF		15	12
A-2	CAFE STANDING	84 SF		5	17
A-2	FIXED SEATING	80 SF	384 in	18	22
A-2	WORKROOM	310 SF		200	2
B	CIRCULATION	556 SF		150	4
B	MANAGER'S DESK	59 SF		150	1
B	MEN'S	52 SF		150	1
B	WOMEN'S	55 SF		150	1
M	MERCHANTILE	24 SF		60	1
S	STORAGE	60 SF		300	1
		1970 SF			72
INTERIOR + EXTERIOR OCC. TOTAL		2314 SF			96

NOTE:

TOTAL OCCUPANT LOAD (**INTERIOR + EXTERIOR**) IS USED FOR PLUMBING FIXTURE CALCULATIONS ONLY.

FUNCTION OF SPACE LEGEND

- ASSEMBLY USE - FIXED SEATING
- ASSEMBLY USE - STANDING SPACE
- ASSEMBLY USE - UNCONCENTRATED USE (TABLES AND CHAIRS, WITHOUT FIXED SEATS)
- BUSINESS
- KITCHENS, COMMERCIAL
- MERCANTILE
- STORAGE

ROOM SCHEDULE

NAME	AREA
EXTERIOR	
OUTDOOR SEATING	343 SF
	343 SF
INTERIOR	
BAR	479 SF
CAFE RETAIL	34 SF
CAFE SEATING	178 SF
CAFE STANDING	84 SF
CIRCULATION	556 SF
FIXED SEATING	80 SF
MANAGER'S DESK	59 SF
MEN'S	52 SF
MERCHANTILE	24 SF
STORAGE	60 SF
WOMEN'S	55 SF
WORKROOM	310 SF
	1970 SF
GRAND TOTAL	2314 SF

KEYED NOTES

01 THRESHOLDS TO BE BARRIER FREE COMPLIANT PER ALL APPLICABLE CODES.

02 30" (762MM) X 48" (1220MM) CLEAR FOR WHEELCHAIR ACCESS.

03 60" (1525 MM) DIAMETER MINIMUM TURN RADIUS FOR WHEELCHAIR ACCESS.

04 MOBILE TRASH BINS, PASTRY AND HAMPER.

05 POS TRANSACTION PLANE, CONDIMENT CART TOP AND HAND-OFF PLANE ARE 34 INCHES (860 MM) ABOVE THE FINISHED FLOOR FOR REACH RANGE. 30" (762MM) X 48" (1220MM) CLEAR AT FIXTURES.

06 HAND SINK, SOAP AND PAPER TOWEL DISPENSER W/ BACKSPLASH AT SIDES, 8IN MIN.

07 30" (762 MM) X 36" (914 MM) CLEAR FLOOR SPACE IN FRONT OF ELECTRICAL PANELS.

08 MOBILE CUP DISPENSER.

09 BARRIER-FREE SIGNAGE AT ACCESSIBLE RESTROOMS.

10 PROVIDE TACTILE "EXIT" SIGNAGE.

11 PLACE FIRE EXTINGUISHER PER LOCAL FIRE CODE REQUIREMENTS. COORDINATE TYPE AND SIZE WITH THE LOCAL INSPECTOR.

12 EXISTING DOOR TO REMAIN.

13 NEW BARRIER FREE HARDWARE ACTUATOR. REFER TO A601. GC TO COORDINATE WITH LL.

14 EXISTING GATE

LEGEND

- X'-X" (XXMM) — TRAVEL DISTANCE
- * — POINT OF CHOICE
- BARRIER FREE PATH OF TRAVEL (MIN 3'-0" - NO PINCH POINT). FOH AND BOH EGRESS PATHS DO NOT INTERSECT. CREATING 2 INDEPENDENT EGRESS AREAS PER (FBC 1004.2.1 INTERVENING SPACES OR ACCESSORY AREAS).
- EMERGENCY LIGHT
- EXIT SIGN WITH EMERGENCY LIGHT

DOOR OCCUPANCY TAG

- 43 — NUMBER OF OCCUPANTS
- 8.6" — CALCULATED EXIT WIDTH REQUIRED (IN.)
- 36" — EXIT WIDTH PROVIDED (IN.)

ROOM TAG

- A-2 — USE GROUP OF SPACE
- WORKROOM — ROOM NAME
- 150 SF — AREA OF SPACE
- 15 NSF — OCCUPANCY MODIFIER PER LIFE SAFETY CODE
- FE — FIRE EXTINGUISHER
- ADA ACCESSIBLE SEATING 36" (915MM) X 48" (1321MM) CLEAR AREA
- ADA ACCESSIBLE CLEAR SPACE AT FIXTURES 30" (762MM) X 48" (1321MM) CLEAR AREA
- 9'-60" (1524MM) — ADA ACCESSIBLE CLEAR RADIAL TURNING FOR STORE REMODEL PROJECTS

MEANS OF EGRESS NOTES

A. EVERY ROOM OR SPACE THAT IS ASSEMBLY OCCUPANCY SHALL HAVE THE OCCUPANT LOAD OF THE ROOM OR SPACE POSTED IN A CONSPICUOUS PLACE, NEAR THE MAIN EXIT ACCESS DOORWAY. POSTED SIGNS SHALL BE OF AN APPROVED LEGIBLE PERMANENT DESIGN AND SHALL BE MAINTAINED BY THE OWNER AUTHORIZED AGENT. (FBCB 1004.9)

B. EGRESS SHALL NOT PASS THROUGH KITCHENS, STORAGE ROOMS, CLOSETS OR SIMILAR SPACES. (FBCB 1016.2)

C. PANIC AND FIRE EXIT HARDWARE, WHERE INSTALLED ON DOORS IN THIS BUILDING SHALL SATISFY THE FOLLOWING (FBCB 1010.1.10):

1) THE ACTUATION PORTION OF THE RELEASING DEVICE SHALL EXTEND AT LEAST ONE-HALF OF THE DOOR LEAF WIDTH.

2) THE MAXIMUM UNLATCHING FORCE DOES NOT EXCEED 15 POUNDS (6.8 KG).

3) PIVOTED OR BALANCED DOORS SHALL BE OF THE PUSH-PAD TYPE WHERE PANIC HARDWARE IS REQUIRED AND THE PAD SHALL NOT EXTEND ACROSS MORE THAN ONE-HALF OF THE DOOR WIDTH, MEASURED FROM THE LATCH SIDE.

4) PANIC HARDWARE LISTED IN ACCORDANCE WITH UL 305.

5) FIRE EXIT HARDWARE LISTED IN ACCORDANCE WITH UL 10C AND UL 305.

D. STRUCTURAL ELEMENTS, FIXTURES OR FURNISHINGS SHALL NOT PROJECT HORIZONTALLY FROM EITHER SIDE MORE THAN 4 INCHES (100 MM) OVER ANY WALKING SURFACE BETWEEN 27 INCHES (685 MM) AND 80 INCHES (2030 MM) ABOVE THE WALKING SURFACE.
EXCEPTION: HANDRAILS SERVING STAIRS AND RAMPS ARE PERMITTED TO PROTRUDE 4 1/2 INCHES (115 MM) FROM THE WALL. (FBCB 1003.3.3)

E. THE PATH OF EGRESS TRAVEL EXITS AND WITHIN EXITS IN THIS BUILDING SHALL BE IDENTIFIED BY EXIT SIGNS CONFORMING TO THE REQUIREMENTS OF SECTION 1011 AND AS NOTED BELOW:

1) EXIT SIGNS SHALL BE READILY VISIBLE FROM ANY DIRECTION OF EGRESS TRAVEL.

2) EXIT SIGNS SHALL BE LOCATED AS NECESSARY TO CLEARLY INDICATE THE DIRECTION OF EGRESS TRAVEL.

3) NO POINT IN A CORRIDOR SHALL BE MORE THAN 100 FT (30.5 M) OR THE LISTED VIEWING DISTANCE FOR THE SIGN, WHICHEVER IS LESS, FROM THE NEAREST VISIBLE EXIT SIGN.

F. WHERE KEY OPERATED LOCKING DEVICES ARE USED, POST A SIGN ON OR ADJACENT TO THE REQUIRED MAIN EXIT DOOR WITH 1 INCH (25 MM) LETTERING STATING THAT "THIS DOOR TO REMAIN UNLOCKED WHEN BUILDING IS OCCUPIED". (1008.1.9.3)

G. EGRESS DOORS OR GATES SHALL BE OPENABLE FROM THE EGRESS SIDE WITHOUT THE USE OF A KEY, SPECIAL KNOWLEDGE OR EFFORT. DOOR HANDLES, PULLS, LATCHES, LOCKS AND OTHER OPERATING DEVICES SHALL BE INSTALLED 34 INCHES (860 MM) TO 48 INCHES (1220 MM) ABOVE FINISHED FLOOR. MANUALLY OPERATED FLUSH BOLTS OR SURFACE BOLTS ARE NOT PERMITTED. THE UNLATCHING OF ANY DOOR OR LEAF SHALL NOT REQUIRE MORE THAN ONE OPERATION. (1008.1.9)

H. LANDINGS SHALL BE PROVIDED ON EACH SIDE OF DOORS AND SUCH LANDING SHALL BE AT THE SAME ELEVATION ON EACH SIDE OF THE DOOR LANDINGS SHALL HAVE A WIDTH NOT LESS THAN THE WIDTH OF THE DOOR AND LENGTH MEASURED IN THE DIRECTION OF TRAVEL OF NOT LESS THAN 44 INCHES (11120 MM). (FBCB 1010.1.5, 1010.1.6)

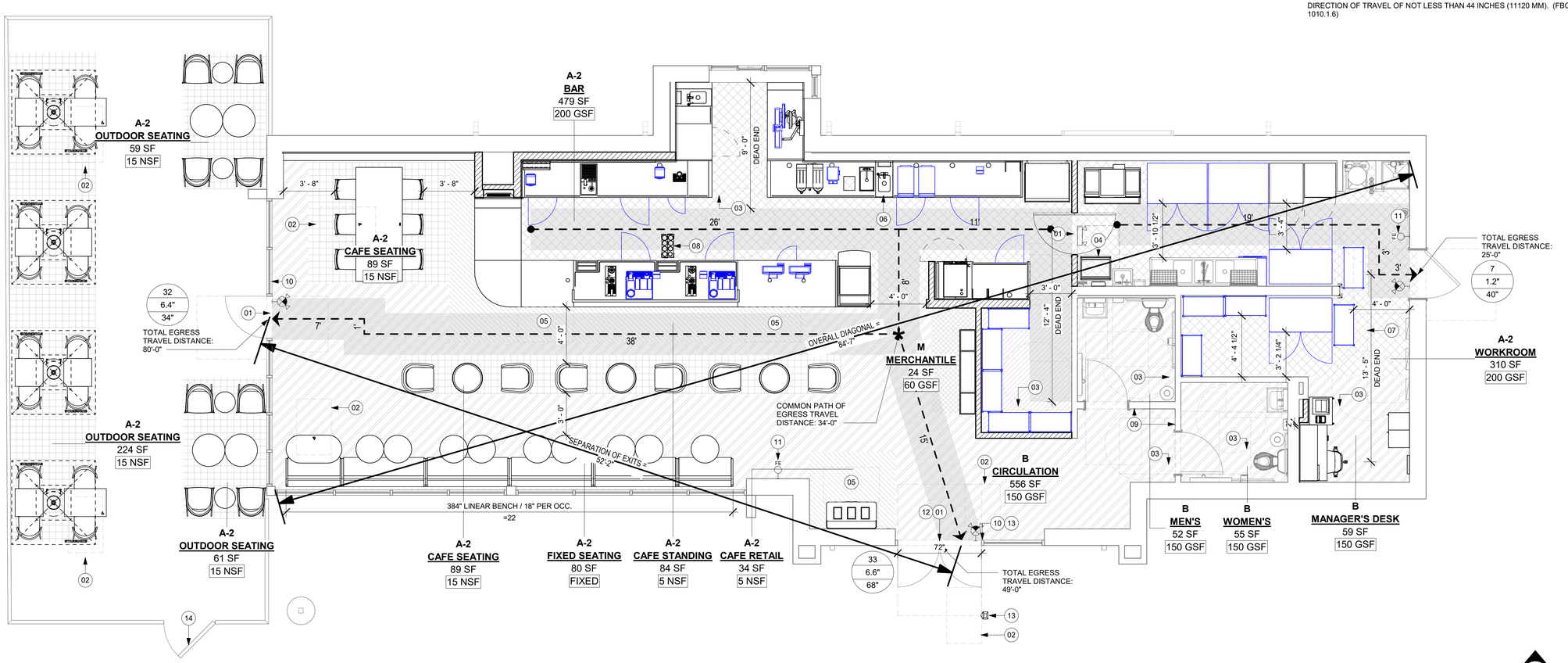

1 LIFE SAFETY PLAN
Scale: 1/4" = 1'-0"

PERMIT SET - FOR CONSTRUCTION USE

© 2022 STARBUCKS COFFEE COMPANY

STARBUCKS®
2401 UTAH AVENUE SOUTH
SEATTLE, WASHINGTON 98134
(206) 318-1575

THESE DRAWINGS AND THE PROJECT MANUAL ARE CONFIDENTIAL AND SHALL REMAIN THE SOLE PROPERTY OF STARBUCKS CORPORATION, WHICH IS THE OWNER OF THE COPYRIGHT IN THIS WORK. THEY SHALL NOT BE REPRODUCED (IN WHOLE OR IN PART), SHARED WITH THIRD PARTIES OR USED IN ANY MANNER ON OTHER PROJECTS OR EXTENSIONS TO THIS PROJECT WITHOUT THE PRIOR WRITTEN CONSENT OF STARBUCKS CORPORATION. THESE DRAWINGS AND SPECIFICATIONS ARE INTENDED TO EXPRESS DESIGN INTENT FOR A PROTOTYPICAL STARBUCKS STORE (WHICH IS SUBJECT TO CHANGE AT ANYTIME) AND DO NOT REFLECT ACTUAL SITE CONDITIONS. NEITHER PARTY SHALL HAVE ANY OBLIGATION NOR LIABILITY TO THE OTHER (EXCEPT STATED ABOVE) UNTIL A WRITTEN AGREEMENT IS FULLY EXECUTED BY BOTH PARTIES.

STARBUCKS TEMPLATE VERSION: i2024.01.01

PABLO GARCIA, AIA, REG. FL NO. AR99297

Gensler

MAIN OFFICE
M. ARTHUR GENSLER JR. & ASSOCIATES
FL QUALIFIERS LIC. NO. AR98486
45 FREMONT ST, SUITE 1500
SAN FRANCISCO, CA 94105 USA
Tel (415) 433.3700
Fax (415) 836.4599

SATELLITE OFFICE
M. ARTHUR GENSLER JR. & ASSOCIATES
540 NW 26TH ST
SUITE 250
MIAMI, FL 33127 USA
Tel (305) 350.7070
Fax (305) 350.7071

PROJECT NAME: NW 43RD & 53RD

PROJECT ADDRESS: 5480 NW 43RD STREET GAINESVILLE, FL 32653

STORE #:	10820
PROJECT #:	34769-081
ISSUE DATE:	03-22-2024
DESIGN MANAGER:	ROMINA VIGNOLO
PRODUCTION DESIGNER:	GENSLER
CHECKED BY:	GENSLER

Revision Schedule

Rev	Date	By	Description

SHEET TITLE:
LIFE SAFETY PLAN

SCALE: AS SHOWN

SHEET NUMBER:
G002

KEYED NOTES

01 30" X 48" CLEAR FOR WHEELCHAIR ACCESS.
02 POS, HAND-OFF PLANE AND CONDIMENT CART COUNTERTOP ARE 2'-10" (MAX.) AFF FOR WHEELCHAIR ACCESSIBILITY. 30" X 48" CLEAR SPACE BY FIXTURES.
03 ALL THRESHOLDS TO BE ADA COMPLIANT PER ALL APPLICABLE CODES.
04 60" DIAMETER CLEAR FOR WHEELCHAIR ACCESS.
05 ADA TABLE TOPS SHALL BE 28" MINIMUM AND 34" MAXIMUM IN HEIGHT ABOVE THE FLOOR. KNEE CLEARANCE SHALL BE A MINIMUM OF 27" IN HEIGHT ABOVE THE FLOOR AND 30" MINIMUM IN WIDTH.
06 ADA MANEUVERING CLEARANCE AT DOORS; FRONT APPROACH , PUSH SIDE, DOOR PROVIDED WITH CLOSER: 48" MIN PERPENDICULAR, 12" MIN PARALLEL.
07 ADA MANEUVERING CLEARANCE AT DOORS; FRONT APPROACH , PULL SIDE, DOOR PROVIDED WITH CLOSER: 60" MIN PERPENDICULAR, 18" MIN PARALLEL.
08 ADA MANEUVERING CLEARANCE AT DOORS; FRONT APPROACH , PULL SIDE, DOOR PROVIDED WITHOUT CLOSER: 48" MIN PERPENDICULAR,
09 EQUIPMENT FOR FUTURE
10 ADA MANEUVERING CLEARANCE AT DOORWAYS WITHOUT DOORS; FRONT APPROACH: 48" MIN PERPENDICULAR, 0" MIN PARALLEL.
11 EXISTING CLEARANCES AT RESTROOMS.

HEALTH DEPT. FINISH SCHEDULE

BAR
FLOOR: POLYVINYL FLOORING
WALL: WALL TILE, BACKSPLASH, WITH POLYVINYL BASE
CEILING: GYPSUM CEILING

CAFE
FLOOR: CERAMIC TILE FLOORING
WALL: WAINSCOT, PAINT, WALL COVERING
CEILING: EXISTING GYPSUM CEILING, ACOUSTICAL PANELS

WORKROOM
FLOOR: POLYVINYL FLOORING
WALL: FRP WITH POLYVINYL BASE
CEILING: ACOUSTICAL CEILING TILE

RESTROOM
FLOOR: CERAMIC TILE FLOORING
WALL: EXISTING CERAMIC TILE
CEILING: EXISTING GYPSUM CEILING

HEALTH DEPT. PLAN NOTES

A. GENERAL CONTRACTOR TO SCHEDULE WITH REFRIGERATION CONTRACTOR TO CONDUCT INITIAL FOOD CASE START-UP AND TESTING. FOR APPROVED CONTRACTOR, CONTACT THE VENDOR.
B. THE SPACE IS SERVED BY THE MUNICIPAL WATER AND SEWER SYSTEM UNLESS OTHERWISE NOTED.
C. ALL EQUIPMENT AND INSTALLATION WILL MEET NATIONAL SANITATION FOUNDATION STANDARDS OR EQUIVALENT.
D. EQUIPMENT UNITS SHALL CONTAIN NO EXPOSED THREADS, EMBELLISHMENTS OR OVERHANGING EDGES THAT SERVE AS PLACES FOR ACCUMULATION OF DUST, DIRT AND DEBRIS
E. WARMING OVEN(S) SHOWN FOR PERMITTING PURPOSES. INSTALLATION AT STORE OPENING TO BE VERIFIED BY STARBUCKS CONSTRUCTION REPRESENTATIVE.
F. EACH HAND WASHING WILL HAVE A SINGLE SERVICE TOWEL AND SOAP DISPENSER AND ALL HAND SINKS TO HAVE A COMBINATION FAUCET OR PREMIXING FAUCET.
G. REFERENCE INTERIOR SCHEDULE SHEETS (I600 SERIES) FOR ADDITIONAL INFORMATION.
H. PROVIDE SNEEZE GUARDS WHERE REQUIRED BY JURISDICTION.
I. ALL FOOD STORAGE AND DISPLAY SHELVING SHALL BE A MINIMUM 6" (150MM) ABOVE FINISH FLOOR.

LEGEND

- ITEM/EQUIPMENT FOR FUTURE
- EXISTING ITEM/EQUIPMENT TO BE REUSED
- EXISTING ITEM/EQUIPMENT TO REMAIN
- ADJACENT TENANT

NOTE: LEGEND IS DEPENDENT ON COLORS USED FOR COMPLETE SCOPE INFORMATION.

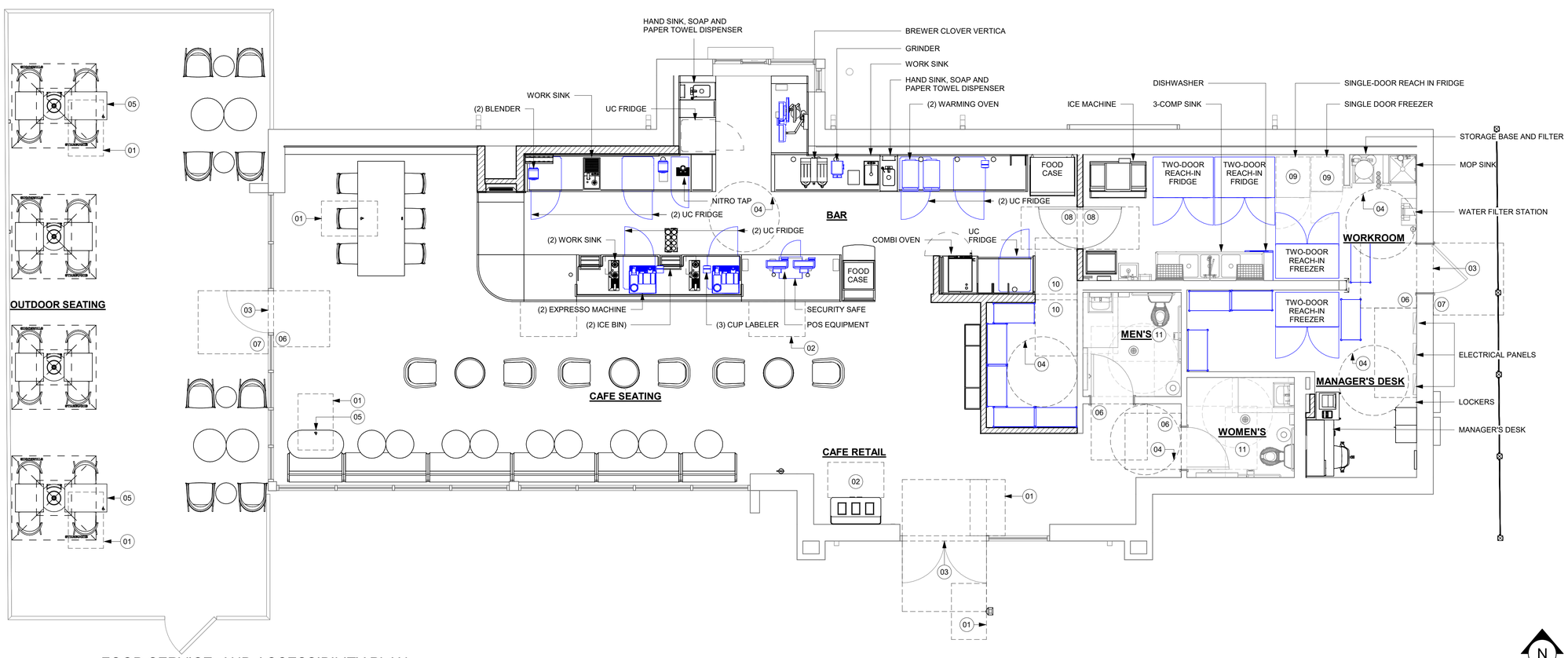

01 FOOD SERVICE AND ACCESSIBILITY PLAN
Scale: 1/4" = 1'-0"

PERMIT SET - FOR CONSTRUCTION USE

© 2022 STARBUCKS COFFEE COMPANY

STARBUCKS®
2401 UTAH AVENUE SOUTH
SEATTLE, WASHINGTON 98134
(206) 318-1575

THESE DRAWINGS AND THE PROJECT MANUAL ARE CONFIDENTIAL AND SHALL REMAIN THE SOLE PROPERTY OF STARBUCKS CORPORATION, WHICH IS THE OWNER OF THE COPYRIGHT IN THIS WORK. THEY SHALL NOT BE REPRODUCED (IN WHOLE OR IN PART), SHARED WITH THIRD PARTIES OR USED IN ANY MANNER ON OTHER PROJECTS OR EXTENSIONS TO THIS PROJECT WITHOUT THE PRIOR WRITTEN CONSENT OF STARBUCKS CORPORATION. THESE DRAWINGS AND SPECIFICATIONS ARE INTENDED TO EXPRESS DESIGN INTENT FOR A PROTOTYPICAL STARBUCKS STORE (WHICH IS SUBJECT TO CHANGE AT ANYTIME) AND DO NOT REFLECT ACTUAL SITE CONDITIONS. NEITHER PARTY SHALL HAVE ANY OBLIGATION NOR LIABILITY TO THE OTHER (EXCEPT STATED ABOVE) UNTIL A WRITTEN AGREEMENT IS FULLY EXECUTED BY BOTH PARTIES.

STARBUCKS TEMPLATE VERSION: i2024.01.01

PABLO GARCIA, AIA, REG. FL NO. AR99297

Gensler
MAIN OFFICE
M. ARTHUR GENSLER JR. & ASSOCIATES
FL QUALIFIER'S LIC. NO. AR99486
45 FREMONT ST, SUITE 1500
SAN FRANCISCO, CA 94105 USA
Tel (415) 433.3700
Fax (415) 836.4599
SATELLITE OFFICE
M. ARTHUR GENSLER JR. & ASSOCIATES
545 NW 26TH ST
SUITE 250
MIAMI, FL 33127 USA
Tel (305) 350.7070
Fax (305) 350.7071

PROJECT NAME:
NW 43RD & 53RD

PROJECT ADDRESS:
5480 NW 43RD STREET
GAINESVILLE, FL 32653

STORE #:	10820
PROJECT #:	34769-081
ISSUE DATE:	03-22-2024
DESIGN MANAGER:	ROMINA VIGNOLO
PRODUCTION DESIGNER:	GENSLER
CHECKED BY:	GENSLER

Revision Schedule

Rev	Date	By	Description

SHEET TITLE:
FOOD SERVICE AND ACCESSIBILITY PLAN
SCALE: AS SHOWN

SHEET NUMBER:
G003

GENERAL NOTES

A. SECTION REFERENCES INDICATED ON THIS SHEET ARE FOR 2023 FLORIDA BUILDING CODE, ACCESSIBILITY, 8TH EDITION.

B. THE RUNNING SLOPE OF WALKING SURFACES SHALL NOT BE STEEPER THAN 1:20. THE CROSS SLOPE OF A WALKING SURFACE SHALL NOT BE STEEPER THAN 1:48 (REF: 403.3).

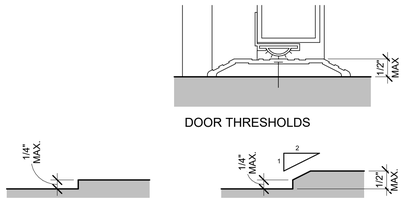

(NOTE: CHANGES IN LEVEL GREATER THAN 1/2" IN HEIGHT SHALL BE RAMPED)

2023 FLORIDA BUILDING CODE, ACCESSIBILITY, 8TH EDITION. ART. 303 CHANGES IN LEVEL.

01 CHANGES IN LEVEL
Scale: 6" = 1'-0"

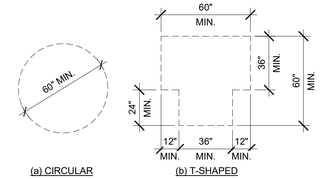

(a) CIRCULAR (b) T-SHAPED

2023 FLORIDA BUILDING CODE, ACCESSIBILITY, 8TH EDITION. ART. 304.3.

02 TURNING SPACE
Scale: 1/4" = 1'-0"

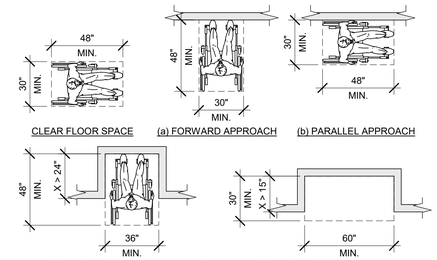

2023 FLORIDA BUILDING CODE, ACCESSIBILITY, 8TH EDITION. ART. 305.3.

03 CLEAR FLOOR SPACE
Scale: 1/4" = 1'-0"

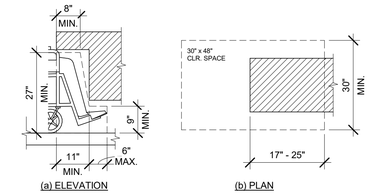

2023 FLORIDA BUILDING CODE, ACCESSIBILITY, 8TH EDITION. FIG. 306.2. TOE CLEARANCE AND FIG. 306.3 KNEE CLEARANCE.

04 KNEE AND TOE CLEARANCE
Scale: 1/2" = 1'-0"

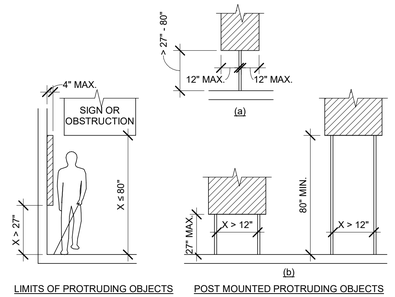

2023 FLORIDA BUILDING CODE, ACCESSIBILITY, 8TH EDITION. ART. 307 PROTRUDING OBJECTS.

05 PROTRUDING OBJECTS
Scale: 1/4" = 1'-0"

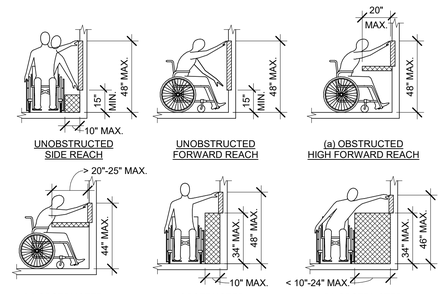

2023 FLORIDA BUILDING CODE, ACCESSIBILITY, 8TH EDITION. ART. 308 REACH RANGES.

06 REACH RANGES
Scale: 1/4" = 1'-0"

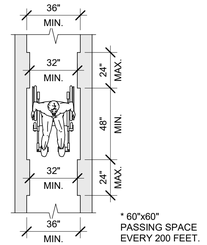

CLEAR WIDTH OF AN ACCESSIBLE ROUTE

2023 FLORIDA BUILDING CODE, ACCESSIBILITY, 8TH EDITION. FIG. 403.5.1 CLEAR WIDTH OF AN ACCESSIBLE ROUTE.

07 CLEAR WIDTH
Scale: 1/4" = 1'-0"

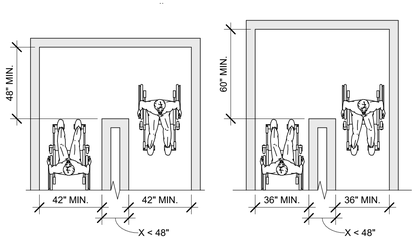

(a) 180 DEGREE TURN (b) 180 DEGREE TURN (EXCEPTION)

2023 FLORIDA BUILDING CODE, ACCESSIBILITY, 8TH EDITION. FIG. 403.5.2 CLEAR WIDTH AT TURN.

08 CLEAR WIDTH AT 180 DEGREE TURN
Scale: 1/4" = 1'-0"

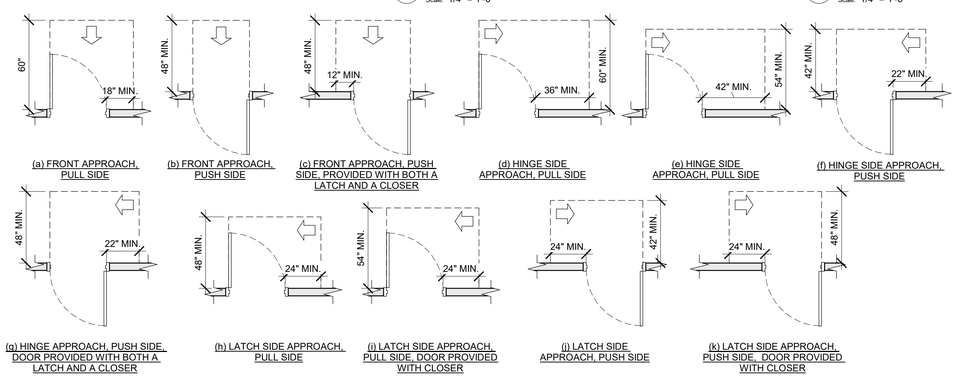

2023 FLORIDA BUILDING CODE, ACCESSIBILITY, 8TH EDITION. FIG. 404.2.4 MANEUVERING CLEARANCES.

09 MANEUVERING CLEARANCES AT SWINGING DOORS
Scale: 1/4" = 1'-0"

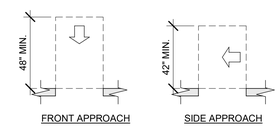

2023 FLORIDA BUILDING CODE, ACCESSIBILITY, 8TH EDITION. FIG. 404.2.4.2.

10 MANEUVERING CLEARANCES AT DOORWAYS WITHOUT DOORS
Scale: 1/4" = 1'-0"

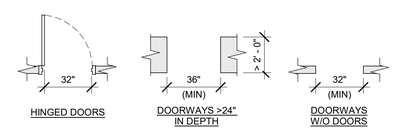

2023 FLORIDA BUILDING CODE, ACCESSIBILITY, 8TH EDITION. 404.2.3.

11 CLEAR WIDTH AT DOORS & DOORWAYS
Scale: 1/4" = 1'-0"

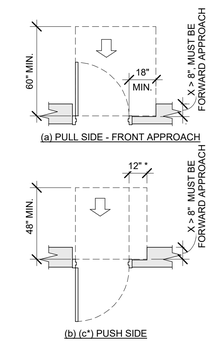

NOTE: WHERE THERE IS AN OBSTRUCTION >8" WITHIN 18" OF THE LATCH SIDE, FORWARD APPROACH MUST BE PROVIDED.

* IF BOTH CLOSER AND LATCH ARE PROVIDED

2023 FLORIDA BUILDING CODE, ACCESSIBILITY, 8TH EDITION. FIG. 404.2.4.3 MANEUVERING CLEARANCES AT RECESSED DOORS AND GATES.

12 RECESSED DOORS
Scale: 1/4" = 1'-0"

NOTE: PROVIDE 1/32" MIN. RAISED COPY AND SYMBOL. COLOR OF FONT AND SYMBOL TO CONTRAST WITH BACKGROUND

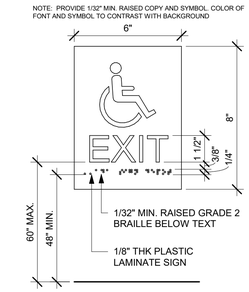

13 ACCESSIBLE EXIT SIGN / SYMBOL
Scale: 3" = 1'-0"

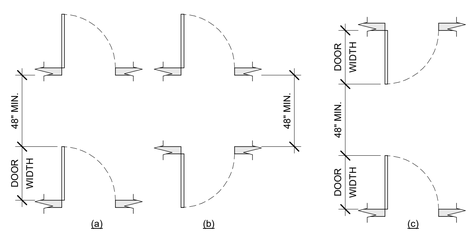

2023 FLORIDA BUILDING CODE, ACCESSIBILITY, 8TH EDITION. FIG. 404.2.6 DOORS IN SERIES AND GATES IN SERIES.

14 DOORS IN SERIES
Scale: 1/4" = 1'-0"

NOTE: ADHESIVE ON FRONT SIDE OF DECAL

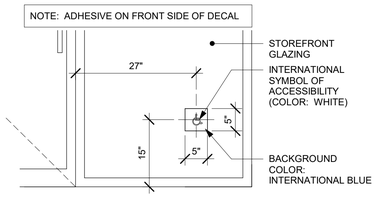

2023 FLORIDA BUILDING CODE, ACCESSIBILITY, 8TH EDITION. FIG. 703.7.2.1 INTERNATIONAL SYMBOL OF ACCESSIBILITY.

15 ACCESSIBLE STOREFRONT ENTRANCE GRAPHIC
Scale: 3/4" = 1'-0"

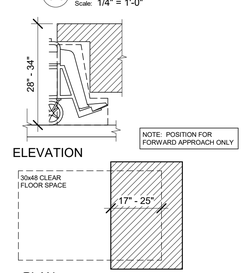

2023 FLORIDA BUILDING CODE, ACCESSIBILITY, 8TH EDITION. ART. 902 DINING SURFACES AND WORK SURFACES.

16 DINING AND WORK SURFACES
Scale: 1/2" = 1'-0"

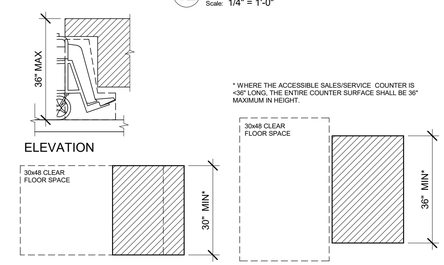

2023 FLORIDA BUILDING CODE, ACCESSIBILITY, 8TH EDITION. ART. 904 CHECK-OUT AISLES AND SALES AND SERVICE COUNTERS.

17 SALES AND SERVICE COUNTERS
Scale: 1/2" = 1'-0"

NOTE: PROVIDE 1/32" MIN. RAISED COPY AND SYMBOL. COLOR OF FONT AND SYMBOL TO CONTRAST WITH BACKGROUND

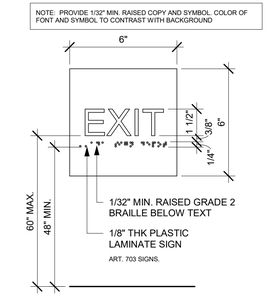

ART. 703 SIGNS.

18 EXIT SIGN - STANDARD
Scale: 3" = 1'-0"

PERMIT SET - FOR CONSTRUCTION USE

© 2022 STARBUCKS COFFEE COMPANY

STARBUCKS®
2401 UTAH AVENUE SOUTH
SEATTLE, WASHINGTON 98134
(206) 318-1575

THESE DRAWINGS AND THE PROJECT MANUAL ARE CONFIDENTIAL AND SHALL REMAIN THE SOLE PROPERTY OF STARBUCKS CORPORATION, WHICH IS THE OWNER OF THE COPYRIGHT IN THIS WORK. THEY SHALL NOT BE REPRODUCED (IN WHOLE OR IN PART), SHARED WITH THIRD PARTIES OR USED IN ANY MANNER ON OTHER PROJECTS OR EXTENSIONS TO THIS PROJECT WITHOUT THE PRIOR WRITTEN CONSENT OF STARBUCKS CORPORATION. THESE DRAWINGS AND SPECIFICATIONS ARE INTENDED TO EXPRESS DESIGN INTENT FOR A PROTOTYPICAL STARBUCKS STORE (WHICH IS SUBJECT TO CHANGE AT ANYTIME) AND DO NOT REFLECT ACTUAL SITE CONDITIONS. NEITHER PARTY SHALL HAVE ANY OBLIGATION NOR LIABILITY TO THE OTHER (EXCEPT STATED ABOVE) UNTIL A WRITTEN AGREEMENT IS FULLY EXECUTED BY BOTH PARTIES.

STARBUCKS TEMPLATE VERSION: i2024.01.01

PABLO GARCIA, AIA, REG. FL NO. AR99297

Gensler

MAIN OFFICE
M. ARTHUR GENSLER JR. & ASSOCIATES
FL QUALIFIER'S LIC. NO. AR99486
45 FREMONT ST, SUITE 1500
SAN FRANCISCO, CA 94105 USA
Tel (415) 433.3700
Fax (415) 836.4599

SATELLITE OFFICE
M. ARTHUR GENSLER JR. & ASSOCIATES
545 NW 26TH ST
SUITE 250
MIAMI, FL 33127 USA
Tel (305) 350.7070
Fax (305) 350.7071

PROJECT NAME:
NW 43RD & 53RD

PROJECT ADDRESS:
5480 NW 43RD STREET
GAINESVILLE, FL 32653

STORE #:	10820
PROJECT #:	34769-081
ISSUE DATE:	03-22-2024
DESIGN MANAGER:	ROMINA VIGNOLO
PRODUCTION DESIGNER:	GENSLER
CHECKED BY:	GENSLER

Revision Schedule

Rev	Date	By	Description

SHEET TITLE:
ACCESSIBILITY GUIDELINES
SCALE: AS SHOWN

SHEET NUMBER:
G004

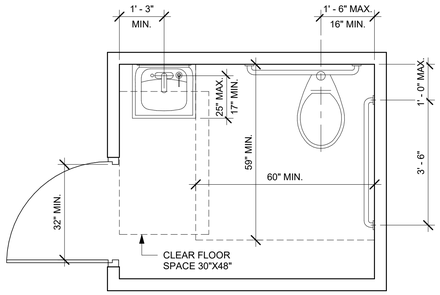

PLAN VIEW

2023 FLORIDA BUILDING CODE, ACCESSIBILITY, 8TH EDITION.
604 WATER CLOSETS AND TOILET COMPARTMENTS

01 ACCESSIBLE UNISEX TOILET ROOM

Scale: 1/2" = 1'-0"

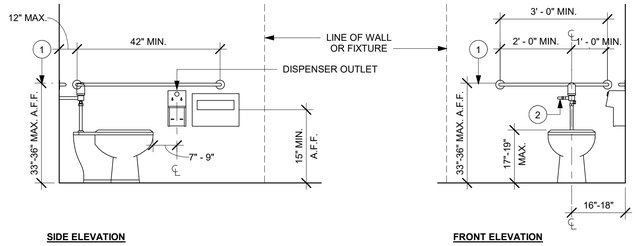

SIDE ELEVATION **FRONT ELEVATION**

NOTE:
1. GRAB BARS SHALL BE INSTALLED IN A HORIZONTAL POSITION, 33 INCHES (840 MM) MINIMUM AND 36 INCHES (915 MM) MAXIMUM ABOVE THE FINISH FLOOR MEASURED TO THE TOP OF THE GRIPPING SURFACE. (FBCA 609.4)
2. FLUSH CONTROLS SHALL BE HAND OPERATED OR AUTOMATIC. HAND OPERATED FLUSH CONTROLS SHALL COMPLY WITH 309. FLUSH CONTROLS SHALL BE LOCATED ON THE OPEN SIDE OF THE WATER CLOSET EXCEPT IN AMBULATORY ACCESSIBLE COMPARTMENTS COMPLYING WITH 604.8.2. (FBCA 604.6)

02 ACCESSIBLE TOILET STALL ELEVATIONS

Scale: 1/2" = 1'-0"

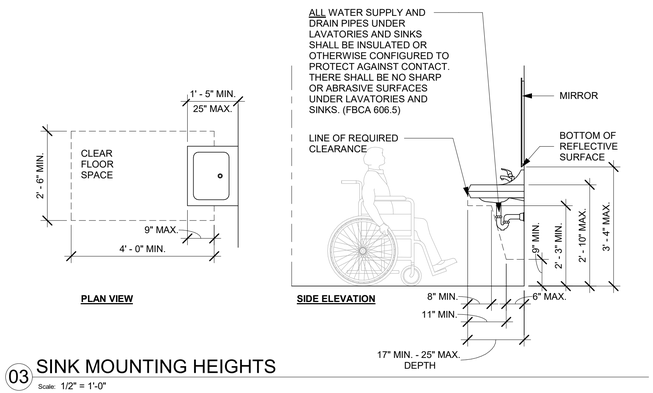

PLAN VIEW **SIDE ELEVATION**

03 SINK MOUNTING HEIGHTS

Scale: 1/2" = 1'-0"

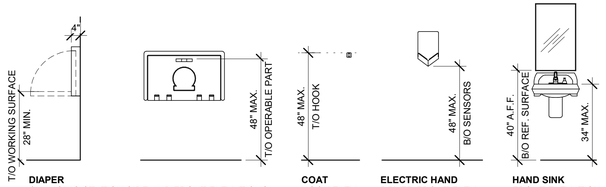

DIAPER
CHANGING STATION SIDE AND FRONT ELEVATIONS

COAT
HOOK ELEV.

ELECTRIC HAND
DRYER FRONT ELEV.

HAND SINK
FRONT ELEVATION

04 MOUNTING HEIGHTS FOR RESTROOM ACCESSORIES

Scale: 3/8" = 1'-0"

PERMIT SET - FOR CONSTRUCTION USE

© 2022 STARBUCKS COFFEE COMPANY

STARBUCKS®
2401 UTAH AVENUE SOUTH
SEATTLE, WASHINGTON 98134
(206) 318-1575

THESE DRAWINGS AND THE PROJECT MANUAL ARE CONFIDENTIAL AND SHALL REMAIN THE SOLE PROPERTY OF STARBUCKS CORPORATION, WHICH IS THE OWNER OF THE COPYRIGHT IN THIS WORK. THEY SHALL NOT BE REPRODUCED (IN WHOLE OR IN PART), SHARED WITH THIRD PARTIES OR USED IN ANY MANNER ON OTHER PROJECTS OR EXTENSIONS TO THIS PROJECT WITHOUT THE PRIOR WRITTEN CONSENT OF STARBUCKS CORPORATION. THESE DRAWINGS AND SPECIFICATIONS ARE INTENDED TO EXPRESS DESIGN INTENT FOR A PROTOTYPICAL STARBUCKS STORE (WHICH IS SUBJECT TO CHANGE AT ANYTIME) AND DO NOT REFLECT ACTUAL SITE CONDITIONS. NEITHER PARTY SHALL HAVE ANY OBLIGATION NOR LIABILITY TO THE OTHER (EXCEPT STATED ABOVE) UNTIL A WRITTEN AGREEMENT IS FULLY EXECUTED BY BOTH PARTIES.

STARBUCKS TEMPLATE VERSION: i2024.01.01

PABLO GARCIA, AIA, REG. FL NO. AR99297

Gensler

MAIN OFFICE
M. ARTHUR GENSLER JR. & ASSOCIATES
FL QUALIFIER'S LIC. NO. AR96486
40 FREMONT ST, SUITE 1500
SAN FRANCISCO, CA 94105 USA
Tel (415) 433.3700
Fax (415) 836.4599

SATELLITE OFFICE
M. ARTHUR GENSLER JR. & ASSOCIATES
545 NW 26TH ST
SUITE 250
MIAMI, FL 33127 USA
Tel (305) 350.7070
Fax (305) 350.7071

PROJECT NAME:
NW 43RD & 53RD

PROJECT ADDRESS:
5480 NW 43RD STREET
GAINESVILLE, FL 32653

STORE #:	10820
PROJECT #:	34769-081
ISSUE DATE:	03-22-2024
DESIGN MANAGER:	ROMINA VIGNOLO
PRODUCTION DESIGNER:	GENSLER
CHECKED BY:	GENSLER

Revision Schedule

Rev	Date	By	Description

SHEET TITLE:
ACCESSIBILITY GUIDELINES
SCALE: AS SHOWN

SHEET NUMBER:
G004.1

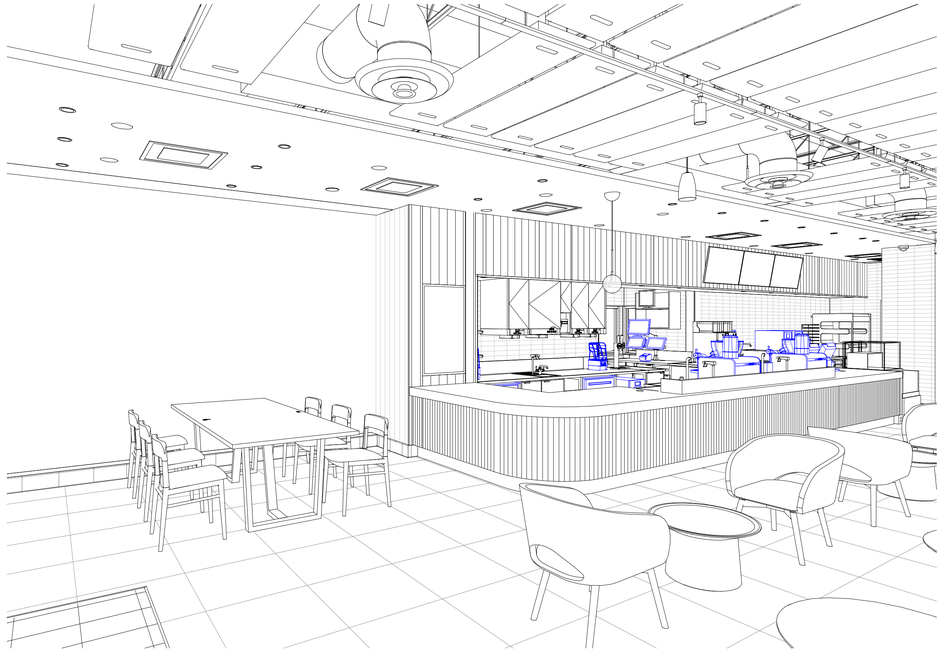

01 VIEW OF COMMUNITY TABLE AND FRONT BAR

Scale:

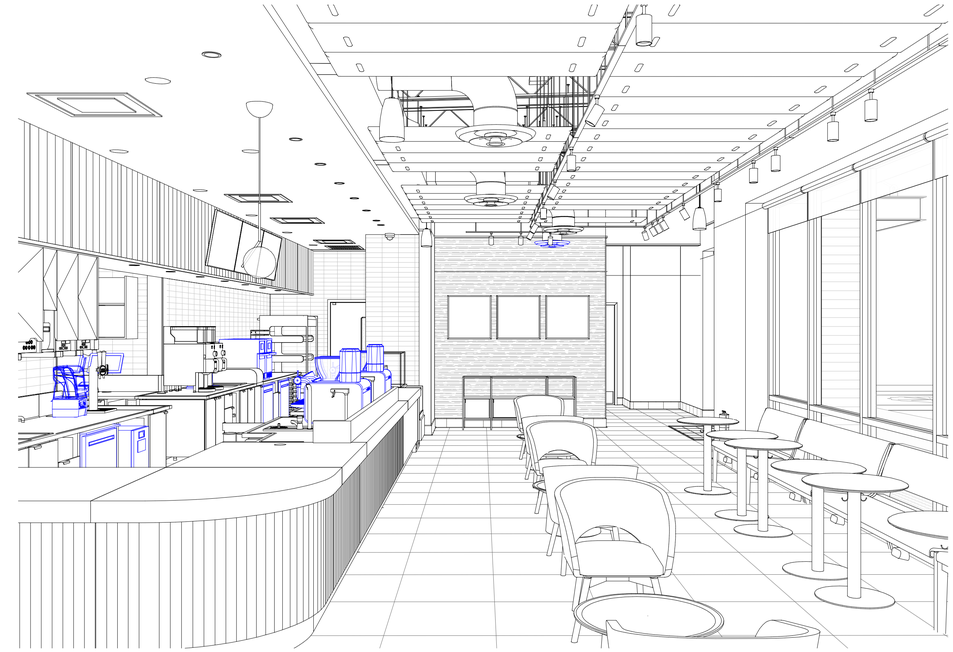

02 VIEW OF CAFE

Scale:

03 VIEW OF BANQUETTE

Scale:

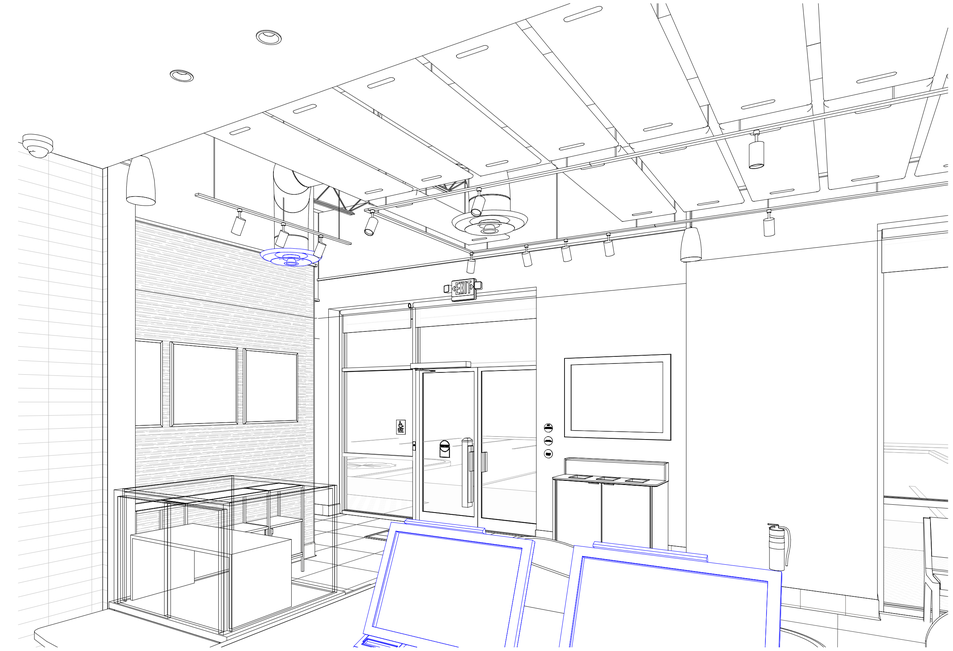

04 VIEW OF MAIN ENTRANCE

Scale:

PERMIT SET - FOR CONSTRUCTION USE

© 2022 STARBUCKS COFFEE COMPANY

STARBUCKS®
2401 UTAH AVENUE SOUTH
SEATTLE, WASHINGTON 98134
(206) 318-1575

THESE DRAWINGS AND THE PROJECT MANUAL ARE CONFIDENTIAL AND SHALL REMAIN THE SOLE PROPERTY OF STARBUCKS CORPORATION, WHICH IS THE OWNER OF THE COPYRIGHT IN THIS WORK. THEY SHALL NOT BE REPRODUCED (IN WHOLE OR IN PART), SHARED WITH THIRD PARTIES OR USED IN ANY MANNER ON OTHER PROJECTS OR EXTENSIONS TO THIS PROJECT WITHOUT THE PRIOR WRITTEN CONSENT OF STARBUCKS CORPORATION. THESE DRAWINGS AND SPECIFICATIONS ARE INTENDED TO EXPRESS DESIGN INTENT FOR A PROTOTYPICAL STARBUCKS STORE (WHICH IS SUBJECT TO CHANGE AT ANYTIME) AND DO NOT REFLECT ACTUAL SITE CONDITIONS. NEITHER PARTY SHALL HAVE ANY OBLIGATION NOR LIABILITY TO THE OTHER (EXCEPT STATED ABOVE) UNTIL A WRITTEN AGREEMENT IS FULLY EXECUTED BY BOTH PARTIES.

STARBUCKS TEMPLATE VERSION: i2024.01.01

PABLO GARCIA, AIA, REG. FL NO. AR99297

Gensler

MAIN OFFICE
M. ARTHUR GENSLER JR. & ASSOCIATES
FL QUALIFIER'S LIC. NO. AR96486
45 FREMONT ST, SUITE 1500
SAN FRANCISCO, CA 94105 USA
Tel (415) 433.3700
Fax (415) 836.4599

SATELLITE OFFICE
M. ARTHUR GENSLER JR. & ASSOCIATES
545 NW 26TH ST
SUITE 250
MIAMI, FL 33127 USA
Tel (305) 350.7070
Fax (305) 350.7071

PROJECT NAME:
NW 43RD & 53RD

PROJECT ADDRESS:
5480 NW 43RD STREET
GAINESVILLE, FL 32653

STORE #:	10820
PROJECT #:	34769-081
ISSUE DATE:	03-22-2024
DESIGN MANAGER:	ROMINA VIGNOLO
PRODUCTION DESIGNER:	GENSLER
CHECKED BY:	GENSLER

Revision Schedule

Rev	Date	By	Description

SHEET TITLE:
PERSPECTIVE VIEWS

SCALE: AS SHOWN

SHEET NUMBER:
G005

ITEMS TO PRESERVE AND RELOCATE

RELOCATED (EXISTING) SPECIALTY EQUIPMENT SCHEDULE - "E"

COUNT	DESIGN ID	DESCRIPTION	COMMENTS
COOLING			
4	10267	FRIDGE UNDERCOUNTER 1 DOOR - 27IN 685MM	
2	11083	FRIDGE REACH IN 2 DOOR - 51X35IN 1295X890MM	
3	12618	FRIDGE UNDERCOUNTER 1 DOOR WITH SHELF - 27IN 685MM	
2	13682	FREEZER REACH IN 2 DOOR - 54IN 1370MM	
1	20011	FRIDGE NITRO 2 TAP JT NITCOM RH	KIT INCLUDES UNDERCOUNTER FRIDGE, FONT, TRAY, AND TUBING
EQUIPMENT			
1	10808	GRINDER DITTING KR1203	
1	15186	WAREWASHER HOT LOW STEAM	
2	20032	OVEN EIKON E2S - BLACK	
STORAGE			
10	10416	WORKROOM SHELVING - 36IN 915MM	

RELOCATED (EXISTING) DATA DEVICES

DESIGN ID	COUNT	DESCRIPTION	COMMENTS
AUDIO VISUAL			
10013	1	DT QUEUE CAMERA	GC TO COORD. W/ SB VENDOR.
DATA			
20294	2	IOT MODULE	

ITEMS TO DEMOLISH

FRONT BAR

ALL CASEWORK
(2) SINK UTENSIL RINSE
(2) FAUCET DOUBLE LAVATORY
(2) FAUCET HOT WATER DISPENSER
(2) FAUCET WATER TOWER 12 IN
(2) FAUCET DIPPERWELL
(2) POS CUP LABELER
(1) CABINET - ESPRESSO CUBBY
(1) ICE BIN DROP IN
(1) FOOD CASE ZEPHYR
(1) PASTRY TRAY CART 60 IN

BACK BAR

ALL CASEWORK
(1) BREWER - DOUBLE
(2) BREWER - SINGLE
(1) SINK RINSE DROP IN
(2) FAUCET DOUBLE LABORATORY WITH BENT RISER SPOUT
(1) COUNTER HAND SINK
(1) COOLING KEG DISPENSING SYSTEM
(1) DRAIN GRATE HALF SQUARE - 12 IN

DT CUBBY

ALL CASEWORK
(1) MONITOR ARM TRIPLE MOUNTED
(1) SINK RINSE DROP IN
(2) FAUCET SINGLE LAVATORY WITH SWING
(1) ICE BIN DROP IN

EXTERIOR

(8) CHAIR LOUNGE PYRAMID
(2) TABLE OCCASIONAL COFFEE COCO
(4) UMBRELLA BASE FOR CANOPY
(4) UMBRELLA 6 FT
(26) CHAIR CAFE PYRAMID
(5) TABLE TOP SQUARE
(3) TABLE CAFE METAL PEDESTAL
(5) TABLE ACCESIBLE METAL

WORKROOM

ALL DATA EQUIPMENT AT MANAGER'S DESK
(1) MANAGER'S DESK
(1) CHAIR CAFE BENT
(1) FILE CABINET 2 DRAWER
(1) MANAGER'S WORKSTATION SHELVES
(2) TEN COMPARTMENT LOCKER
(1) PASTRY TRAY RACK

CAFE SEATING / RETAIL

ALL EXISTING FRAMED ARTWORK
(29) CHAIR CAFE BENT
(14) TABLE TOP ROUND
(14) TABLE BASE CAFE DOME ACCENT
(3) TABLE ACCESIBLE 46 IN
(1) BANQUETTE
(8) CHAIR LOUNGE ARMLESS
(1) TABLE OCCASIONAL HEXAGONAL
(1) TABLE TOP COMMUNITY
(1) TABLE BASE COMMUNITY
(1) CHAIR STOOL
(1) CONDIMENT CART
(1) MERCH BAY UNIT

KEYED NOTES

01 DEMOLISH MENU BOARDS ABOVE.
02 DEMOLISH UPPER CUBBIES.
03 DEMOLISH BACKBAR CERAMIC WALL TILE. PATCH AND PREPARE SURFACE FOR INSTALLATION OF NEW CERAMIC WALL TILE.
04 FLOOR SINKS TO BE DEMOLISHED, CAP-OFF/RE-ROUTE PLUMBING LINES AND FILLED DEMOLISHED, AND/OR REPAIR AS REQUIRED. REFER TO SHEET A102 FOR NEW FLOOR SINKS LOCATION.
05 REMOVE EXISTING DOOR HARDWARE AND PREP FOR NEW HARDWARE.
06 WALK-OFF MAT TO BE DEMOLISHED. PREP SURFACE FOR INSTALLATION OF NEW WALK-OFF MAT.
07 RELOCATE EXISTING ICE MACHINE INTO ANOTHER STORE. COORDINATE WITH CONSTRUCTION MANAGER/FACILITIES MANAGER

LEGEND

- EXISTING ITEM/EQUIPMENT TO BE REMOVED
- EXISTING AREA TO BE REMOVED
- EXISTING WALL TO BE REMOVED
- EXISTING ITEM/EQUIPMENT TO BE REUSED
- EXISTING ITEM/EQUIPMENT TO REMAIN

NOTE: LEGEND IS DEPENDENT ON COLORS USED FOR COMPLETE SCOPE INFORMATION.

GENERAL NOTES

A. IF DURING DEMOLITION CONDITIONS ARE REVEALED THAT MAY JEOPARDIZE INTEGRITY OF STRUCTURE OR PRECLUDE FOLLOWING DESIGN INTENT, GENERAL CONTRACTOR TO NOTIFY STARBUCKS CONSTRUCTION MANAGER IMMEDIATELY.

B. GC IS RESPONSIBLE FOR SITE INVESTIGATION PRIOR TO DEMOLITION TO REVEAL FULL SCOPE OF WORK. NOTIFY STARBUCKS CONSTRUCTION MANAGER IF EXISTING CONDITIONS DEVIATE FROM CONSTRUCTION DOCUMENTS.

C. REMOVE EXISTING INTERIOR WALL FINISH AS SHOWN. PATCH, REPAIR AND PREP. SUBSTRATE TO RECEIVE NEW FINISH. REMOVE WALL COVERINGS ON EXISTING WALLS TO REMAIN THAT FACE AREAS OF DEMOLITION. REMOVAL SHALL INCLUDE ANY RESIDUAL MATERIAL AFTER DEMOLITION, (I.E. PIECES OF WALL COVERING OR BACKING). REMOVAL OF ALL COVERINGS IS TO BE DONE W/O DAMAGING THE EXISTING WALL SURFACE TO REMAIN. ALSO REMOVE WALL DEVICES AND ITEMS MOUNTED TO WALLS.

D. REMOVE EXISTING FLOORING AS SHOWN. PATCH, REPAIR AND PREP. SUBSTRATE TO RECEIVE NEW FINISH. REMOVAL OF EXISTING FLOORING INCLUDES, BUT IS NOT LIMITED TO REMOVAL OF EXISTING CERAMIC TILE, CARPET OR VINYL TILE FLOORING AND ASSOCIATED WALL BASE. SUBFLOOR TO BE STRIPPED OF ALL COVERING/FINISH AND CLEANED TO REMOVE EXISTING ADHESIVE, GROUT, MORTAR, DIRT AND COATINGS. FINAL SURFACE TO BE STREAK-FREE WITH NO MACHINE MARKS AND/OR SMOOTH, STABLE AND LEVEL. PROVIDE LEVELING WHERE NECESSARY TO ACCOMMODATE NEW FINISHES.

E. DEMOLITION PLANS REPRESENT APPROXIMATE LOCATION OF EXISTING WALLS TO BE DEMOLISHED. FIELD VERIFY TYPE OF CONSTRUCTION AND HEIGHT OF WALLS. PLANS DO NOT NECESSARILY INDICATE ALL DEMO WALLS, COUNTERS, HANDRAILS, WALL PROTECTION, CLOSETS, SINKS ETC. PRIOR TO DEMOLITION, FIELD VERIFY THAT WALLS TO BE REMOVED DO NOT PROVIDE SUPPORT FOR EXISTING BUILDING ELEMENTS AND EXISTING CONSTRUCTION TO REMAIN. NOTIFY STARBUCKS CONSTRUCTION MANAGER IF DEMOLITION WALLS SUPPORT EXISTING BUILDING ELEMENTS.

F. DEMOLISH AND REMOVE DOORS, VINYL BASE, CONDUIT, WIRING, DUPLEXES, DATA OUTLETS, CABLES, SHELVING, METAL STUD AND GYPSUM BOARD WALLS, CLOSETS, CABINETS, FILES, COUNTERS, WOOD MOLDING, SHELVES AND ENCLOSURES WHERE APPLICABLE.

G. VERIFY WITH STARBUCKS CONSTRUCTION MANAGER ACCESS TO THE DEMOLITION AREA, INGRESS AND EGRESS

H. PROTECT EXISTING FLOORS, WALLS AND CORNERS TO REMAIN ALONG WORK ACCESS ROUTES.

I. CONTAIN DUST AND DEBRIS WITHIN THE DEMOLITION AREA.

J. GC SHALL PERFORM WORK IN A MANNER THAT DOES NOT DAMAGE THE EXISTING STRUCTURE. DEMOLITION SHALL NOT COMPROMISE THE STRUCTURAL INTEGRITY OF ANY WALLS, FLOORS, CEILINGS, SUPPORTS, STRUCTURE, ETC. TO REMAIN.

K. ALL DEMOLITION MATERIALS AND DEBRIS SHALL BE DISPOSED OF ACCORDING TO FEDERAL, STATE AND LOCAL REGULATIONS.

L. AT LOCATIONS WHERE EXISTING WALLS ARE TO BE REMOVED NEAR EXISTING WALLS TO REMAIN, PERFORM DEMOLITION WITHOUT DISTURBING EXISTING ELEMENTS TO REMAIN. WALLS TO REMAIN SHALL BE INTACT AND HAVE A NEAT SURFACE.

M. REFER TO "ITEMS TO BE SALVAGED" LIST FOR ITEMS THAT SHALL BE SALVAGED FOR RELOCATION. VERIFY WITH OWNER FOR ON SITE STORAGE LOCATION OF SALVAGED ITEMS.

N. DAMAGED FIREPROOFING SHALL BE REPAIRED/ REPLACED TO MATCH EXISTING.

O. GC SHALL DEMOLISH ANY EXISTING ABANDONED VOICE/DATA CABLING AND DEAD OR NON-USE ELECTRICAL BACK TO PANEL. ALL RECEPTACLES NOT REUSED ARE TO BE REMOVED, PATCHED AND PAINTED.

P. REMOVAL OF LOW VOLTAGE EQUIPMENT, PERTAINING TO DATA/COMMUNICATIONS AND TELEPHONE SHALL BE VERIFIED BY THE STARBUCKS CONSTRUCTION MANAGER PRIOR TO REMOVAL. SALVAGED EQUIPMENT SHALL BE STORED IN A CLIMATE CONTROLLED ENVIRONMENT FOR FUTURE INSTALLATION. CAP ALL UTILITIES AND/OR REMOVE TO PANEL. UNO.

Q. LABEL ALL ITEMS AND PROPERLY STORE FOR RE-INSTALL.

R. REMOVE EXISTING PLUMBING FIXTURES AND HVAC EQUIPMENT AS NECESSARY. CAP LINES AND TERMINATE DUCTS AS NECESSARY FOR THOSE NOT BEING RE-USED. CAP-OFF/RE-ROUTE PLUMBING LINES AND FILLED DEMOLISHED, REMOVED AND/OR REPAIR AS REQUIRED.

S. REMOVE CERAMIC TILE AND BASE THROUGHOUT CAFE AND RESTROOMS. PATCH AND PREPARE FOR NEW FINISHES. REMOVE RESTROOMS TOILET ACCESSORIES.

T. REMOVE FLOOR TILE AND TILE BASE AT ENGINE AND BOH, AND PREPARE FLOOR SURFACE FOR INSTALLATION OF NEW POLYVINYL FLOOR FINISH.

U. REMOVE CHAIR RAIL AND WAINSCOT THROUGHOUT CAFE. PATCH AND PREPARE WALL FOR NEW FINISH.

V. DEMOLISH ALL INTERIOR AND EXTERIOR FURNITURE, ARTWORK, MILLWORK, SHELVES, WIRE RACKS, CASEWORK CABINETS, COUNTERTOPS, DIEWALL, FINISH PANELS, ICE BINS, HANGING DEVICES, AND FASTENERS AS SHOWN THROUGHOUT CAFE. REMOVE ASSOCIATED ELECTRICAL AND DATA LINES, CAP EXISTING PLUMBING. UNO.

W. RELOCATE EXISTING ICE MACHINE INTO ANOTHER STORE. COORDINATE WITH CONSTRUCTION MANAGER/FACILITIES MANAGER. UNO.

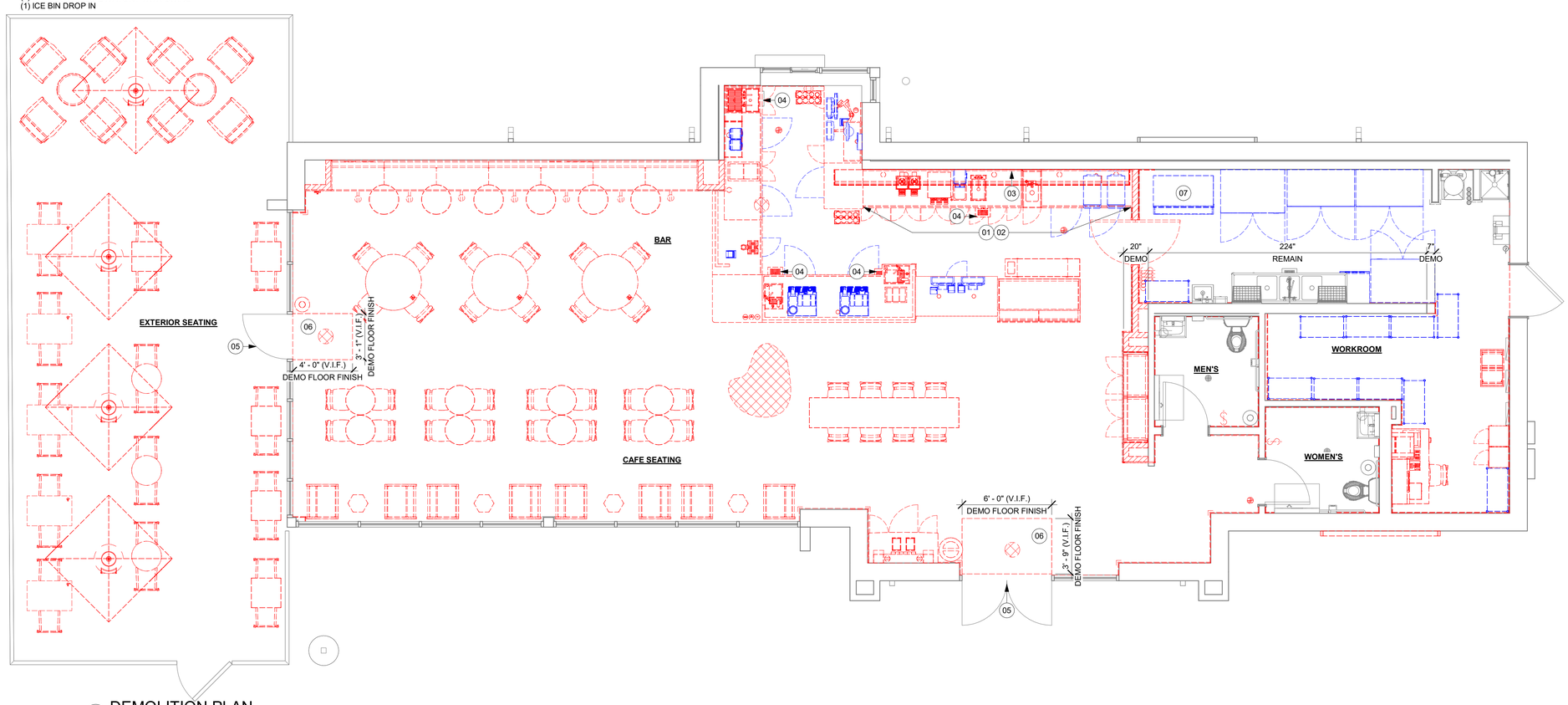

01 DEMOLITION PLAN
Scale: 1/4" = 1'-0"

PERMIT SET - FOR CONSTRUCTION USE

© 2022 STARBUCKS COFFEE COMPANY

STARBUCKS®
2401 UTAH AVENUE SOUTH
SEATTLE, WASHINGTON 98134
(206) 318-1575

THESE DRAWINGS AND THE PROJECT MANUAL ARE CONFIDENTIAL AND SHALL REMAIN THE SOLE PROPERTY OF STARBUCKS CORPORATION, WHICH IS THE OWNER OF THE COPYRIGHT IN THIS WORK. THEY SHALL NOT BE REPRODUCED (IN WHOLE OR IN PART), SHARED WITH THIRD PARTIES OR USED IN ANY MANNER ON OTHER PROJECTS OR EXTENSIONS TO THIS PROJECT WITHOUT THE PRIOR WRITTEN CONSENT OF STARBUCKS CORPORATION. THESE DRAWINGS AND SPECIFICATIONS ARE INTENDED TO EXPRESS DESIGN INTENT FOR A PROTOTYPICAL STARBUCKS STORE (WHICH IS SUBJECT TO CHANGE AT ANYTIME) AND DO NOT REFLECT ACTUAL SITE CONDITIONS. NEITHER PARTY SHALL HAVE ANY OBLIGATION NOR LIABILITY TO THE OTHER (EXCEPT STATED ABOVE) UNTIL A WRITTEN AGREEMENT IS FULLY EXECUTED BY BOTH PARTIES.

STARBUCKS TEMPLATE VERSION: i2024.01.01

PABLO GARCIA, AIA, REG. FL NO. AR99297

Gensler

MAIN OFFICE
M. ARTHUR GENSLER JR. & ASSOCIATES
FL QUALIFIER'S LIC. NO. AR96486
45 FREMONT ST, SUITE 1500
SAN FRANCISCO, CA 94105 USA
Tel (415) 433.3700
Fax (415) 836.4599

SATELLITE OFFICE
M. ARTHUR GENSLER JR. & ASSOCIATES
545 NW 26TH ST
SUITE 250
MIAMI, FL 33127 USA
Tel (305) 350.7070
Fax (305) 350.7071

PROJECT NAME:
NW 43RD & 53RD

PROJECT ADDRESS:
5480 NW 43RD STREET
GAINESVILLE, FL 32653

STORE #:	10820
PROJECT #:	34769-081
ISSUE DATE:	03-22-2024
DESIGN MANAGER:	ROMINA VIGNOLO
PRODUCTION DESIGNER:	GENSLER
CHECKED BY:	GENSLER

Revision Schedule

Rev	Date	By	Description

SHEET TITLE:
DEMOLITION FLOOR PLAN
SCALE: AS SHOWN

SHEET NUMBER:
D101

KEYED NOTES

01 EXISTING TO REMAIN (ETR).
02 DEMOLISH GYP CEILING, FRAMING AND ASSOCIATED FASTENERS TO BOTTOM OF STRUCTURE ABOVE.
03 DEMOLISH ACT CEILING, FRAMING AND ASSOCIATED FASTENERS TO BOTTOM OF STRUCTURE ABOVE.
04 DEMOLISH WALL SPEAKERS, LV CABLING AND ASSOCIATED FASTENERS.
05 DEMOLISH EMERGENCY EXIT SIGNAGE.
06 SALVAGE WIFI EQUIPMENT FOR RELOCATION.
07 DEMOLISH WINDOW BLINDS.
08 HVAC PIPING TO BE MODIFIED AS REQUIRED TO ACCOMODATE NEW LAYOUT AND CEILING.
09 HVAC SYSTEMS TO REMAIN. GC TO PRESERVE AND PROTECT DURING DEMOLITION AND CONSTRUCTION.
10 DEMOLISH RECCESSED CANS AS SHOWN. PATCH AND REPAIR EXISTING CEILING TO PROVIDE LEVEL 2 FINISH. REMOVE CONDUIT, ELECTRICAL BOXES AND WIRING.
11 REMOVE HANGING CEILING AND RELATED LIGHTING FIXTURES. PATCH AND REPAIR CEILING ABOVE TO PROVIDE LEVEL 2 FINISH.
12 PROTECT EXISTING AIR CURTAIN THROUGH RENOVATION
13 DEMOLISH ALL EXISTING ARTWORK.
14 DEMOLISH EXTERIOR GREEN WALL
15 DEMOLISH EXISTING ROLLER SHADES

GENERAL NOTES

A. IF DURING DEMOLITION CONDITIONS ARE REVEALED THAT MAY JEOPARDIZE INTEGRITY OF STRUCTURE OR PRECLUDE FOLLOWING DESIGN INTENT, GENERAL CONTRACTOR TO NOTIFY STARBUCKS CONSTRUCTION MANAGER IMMEDIATELY.

B. REMOVE EXTRANEOUS EQUIPMENT AS NECESSARY.

C. EXISTING SPRINKLERS TO REMAIN OPERATIONAL DURING CONSTRUCTION. REMOVE SPRINKLER HEADS / PIPING AND SALVAGE FOR REUSE. SPRINKLER MODIFICATIONS UNDER SEPARATE PERMIT / DEFERRED SUBMITTAL.

D. DEMOLISH AND REMOVE SUSPENDED ACOUSTIC LAY-IN, SPLINE OR GYPSUM/ PLASTER CEILING INCLUSIVE OF HANGERS AND CARRYING CHANNELS, WIRES, CABLES, CONDUIT, ADHERED CEILING TILES, FLEX CONDUIT, ELECTRICAL BOXES, SMOKE DETECTORS, LIGHT FIXTURES AND WIRING, DUCT WORK, PIPING AND SUPPORT HANGERS. CUT HANGERS FLUSH. SPACES RECEIVING WALL DEMOLITION WILL ALSO HAVE CEILING DEMOLITION UNLESS OTHERWISE NOTED.

E. REMOVAL OF LOW VOLTAGE EQUIPMENT, PERTAINING TO DATA/ COMMUNICATIONS AND TELEPHONE SHALL BE VERIFIED BY STARBUCKS CONSTRUCTION MANAGER PRIOR TO REMOVAL. SALVAGED EQUIPMENT SHALL BE STORED IN A CLIMATE CONTROLLED ENVIRONMENT FOR FUTURE INSTALLATION.

F. REMOVE ROLLER SHADES THROUGHOUT CAFE. UNO.

G. REMOVE ALL LIGHTNING THROUGHOUT CAFE AS INDICATED. UNO.

LEGEND

EXISTING ITEM/EQUIPMENT TO BE REMOVED
EXISTING AREA TO BE REMOVED
EXISTING WALL TO BE REMOVED
EXISTING ITEM/EQUIPMENT TO BE REUSED
EXISTING ITEM/EQUIPMENT TO REMAIN
ADJACENT TENANT

NOTE: LEGEND IS DEPENDENT ON COLORS USED FOR COMPLETE SCOPE INFORMATION.

TRACK LIGHTING
RECESSED CAN LIGHT
GENERAL PENDANT LIGHTING FIXTURE
DECORATIVE LARGE PENDANT LIGHTING FIXTURE
DECORATIVE SMALL PENDANT LIGHTING FIXTURE
TROFFER
EXIT SECURITY LIGHT
EXIT SIGN/ EMERGENCY LIGHTING COMBO
SMOKE DETECTOR
360° SECURITY CAMERA
SUPPLY AIR
RETURN AIR
WALL MOUNTED SPEAKER
WALL SCONCE AT RESTROOM
WIFI ACCESS POINT (WAP)
AIR CURTAIN
(E) 2'X2' ACT SUSPENDED CEILING SYSTEM
(E) 2'X4' ACT SUSPENDED CEILING SYSTEM

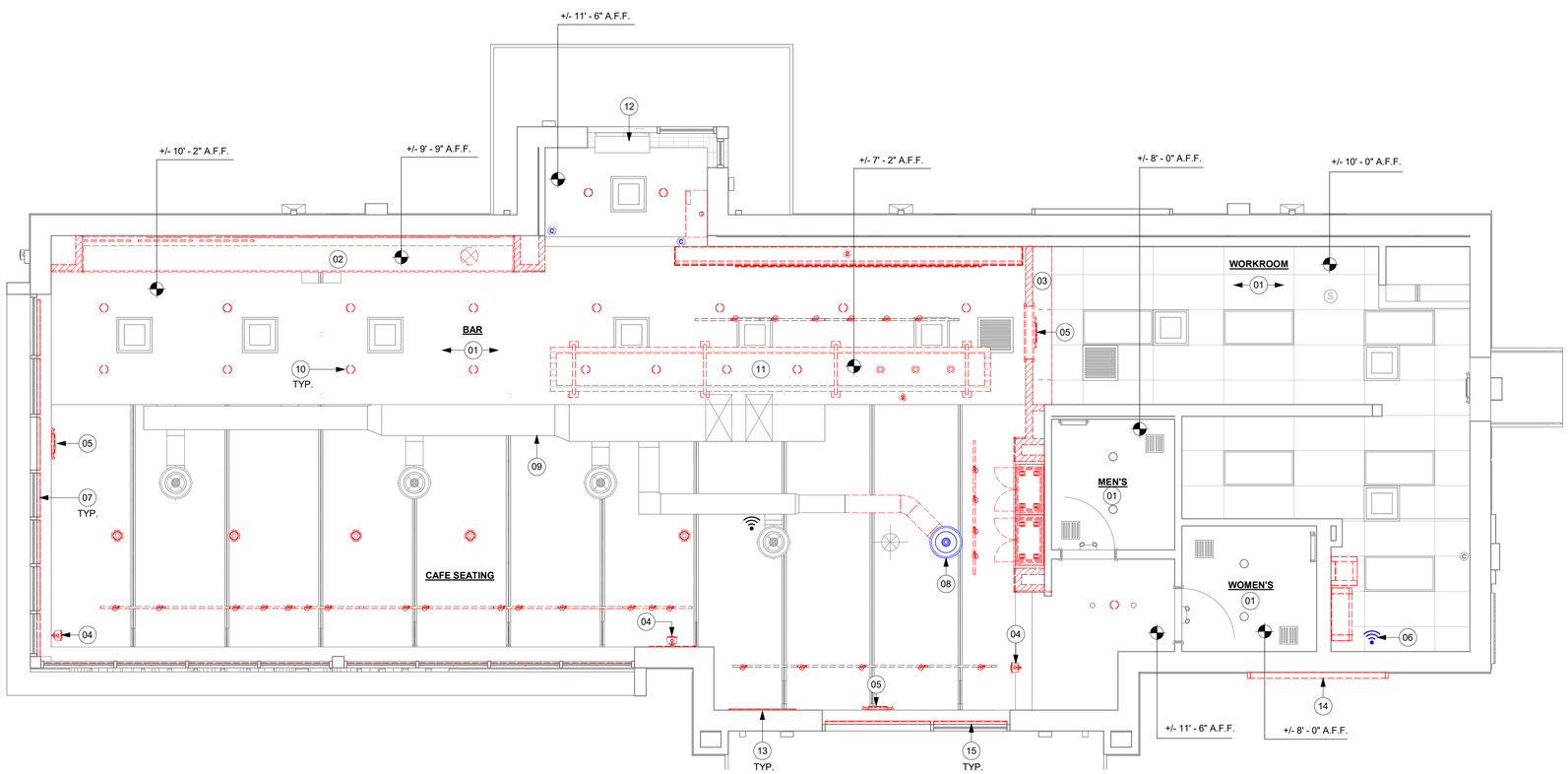

1 DEMOLITION REFLECTED CEILING PLAN
Scale: 1/4" = 1'-0"

N

PERMIT SET - FOR CONSTRUCTION USE

© 2022 STARBUCKS COFFEE COMPANY

STARBUCKS®
2401 UTAH AVENUE SOUTH
SEATTLE, WASHINGTON 98134
(206) 318-1575

THESE DRAWINGS AND THE PROJECT MANUAL ARE CONFIDENTIAL AND SHALL REMAIN THE SOLE PROPERTY OF STARBUCKS CORPORATION, WHICH IS THE OWNER OF THE COPYRIGHT IN THIS WORK. THEY SHALL NOT BE REPRODUCED (IN WHOLE OR IN PART), SHARED WITH THIRD PARTIES OR USED IN ANY MANNER ON OTHER PROJECTS OR EXTENSIONS TO THIS PROJECT WITHOUT THE PRIOR WRITTEN CONSENT OF STARBUCKS CORPORATION. THESE DRAWINGS AND SPECIFICATIONS ARE INTENDED TO EXPRESS DESIGN INTENT FOR A PROTOTYPICAL STARBUCKS STORE (WHICH IS SUBJECT TO CHANGE AT ANYTIME) AND DO NOT REFLECT ACTUAL SITE CONDITIONS. NEITHER PARTY SHALL HAVE ANY OBLIGATION NOR LIABILITY TO THE OTHER (EXCEPT STATED ABOVE) UNTIL A WRITTEN AGREEMENT IS FULLY EXECUTED BY BOTH PARTIES.

STARBUCKS TEMPLATE VERSION: i2024.01.01

PABLO GARCIA, AIA, REG. FL NO. AR99297

Gensler
MAIN OFFICE
M. ARTHUR GENSLER JR. & ASSOCIATES
FL QUALIFIER'S LIC. NO. AR96486
43 FREMONT ST, SUITE 1500
SAN FRANCISCO, CA 94105 USA
Tel (415) 433.3700
Fax (415) 836.4599

SATELLITE OFFICE
M. ARTHUR GENSLER JR. & ASSOCIATES
545 NW 26TH ST
SUITE 250
MIAMI, FL 33127 USA
Tel (305) 350.7070
Fax (305) 350.7071

PROJECT NAME:
NW 43RD & 53RD

PROJECT ADDRESS:
5480 NW 43RD STREET
GAINESVILLE, FL 32653

STORE #:	10820
PROJECT #:	34769-081
ISSUE DATE:	03-22-2024
DESIGN MANAGER:	ROMINA VIGNOLO
PRODUCTION DESIGNER:	GENSLER
CHECKED BY:	GENSLER

Revision Schedule

Rev	Date	By	Description

SHEET TITLE:
DEMO REFLECTED CEILING PLAN
SCALE: AS SHOWN

SHEET NUMBER:
D102

KEYED NOTES

01 DEMOLISH EXISTING GREEN WALL. PATCH AND REPAIR STOREFRONT IF NEEDED.

GENERAL NOTES

A. GENERAL CONTRACTOR TO COORDINATE AND SCHEDULE SIGNAGE INSTALLATION WITH THE SIGNAGE CONTRACTOR PROVIDING A MINIMUM SCHEDULING NOTICE OF 4 WEEKS AND 1 WEEK PRIOR TO SCHEDULED DATE OF INSTALLATION. CONSTRUCTION MANAGER TO PROVIDE GENERAL CONTRACTOR WITH SIGNAGE CONTRACTOR CONTACT INFORMATION.

B. GENERAL CONTRACTOR SHALL COORDINATE WITH ELECTRICAL CONTRACTOR TO FURNISH AND INSTALL ELECTRICAL CIRCUITS INCLUDING ALL CONDUIT, WIRE, CONNECTIONS AND BREAKER AT PANEL BOARD NECESSARY TO SERVE SIGNAGE.

C. GENERAL CONTRACTOR TO PROVIDE FIRE TREATED 2X WOOD BLOCKING OR EQUIVALENT FOR COMPLETE AND SECURE SUPPORT OF ANY WALL-MOUNTED EQUIPMENT, CABINETRY, FURNISHINGS, ARTWORK AND/OR SIGNAGE.

D. SIGNAGE CONTRACTOR SHALL VERIFY SIZE AND LOCATION OF ANY AND ALL ALLOWABLE MONUMENT OR POLE SIGNAGE AND PROVIDE SHOP DRAWING(S) PRIOR TO FABRICATION TO THE STARBUCKS DESIGNER FOR APPROVAL.

E. SIGNAGE CONTRACTOR TO INSTALL SIGNAGE IN COMPLIANCE WITH LOCAL CODES AND OBTAIN PERMIT.

F. SIGNAGE CONTRACTOR TO SUPPLY SHOP DRAWINGS TO CONSTRUCTION MANAGER AND TO THE GENERAL CONTRACTOR AS NEEDED. GENERAL CONTRACTOR TO NOTIFY CONSTRUCTION MANAGER IMMEDIATELY IF SHOP DRAWINGS OR INSTALLATION IS IN DISCREPANCY WITH ARCHITECTURAL DRAWINGS.

G. GENERAL CONTRACTOR TO CLEAN, PATCH AND REPAIR EXISTING EXTERIOR AS REQUIRED.

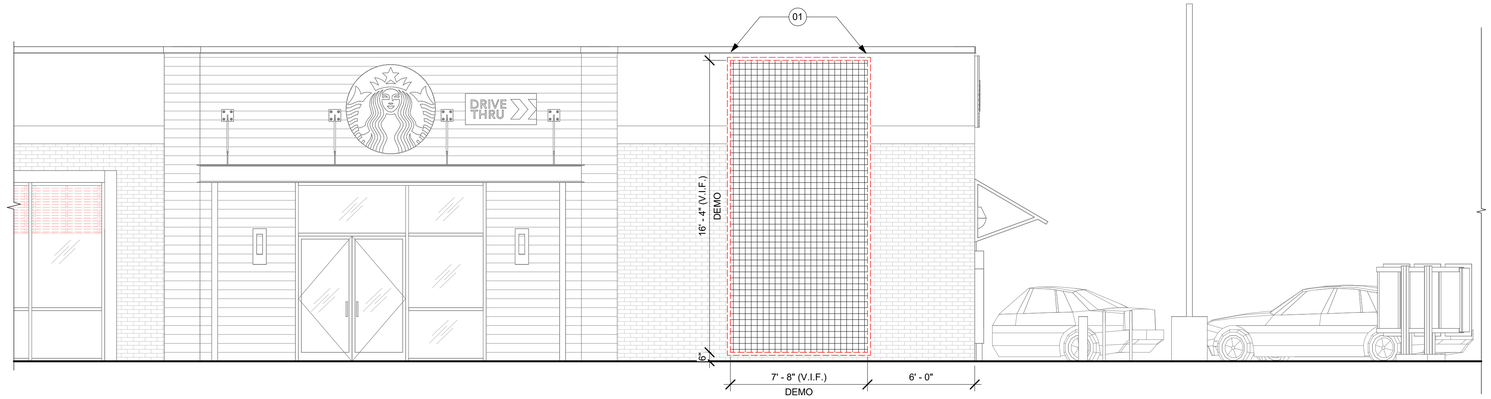

3 EXISTING ELEVATION - SOUTH
Scale: 1/4" = 1'-0"

PERMIT SET - FOR CONSTRUCTION USE

© 2022 STARBUCKS COFFEE COMPANY

STARBUCKS®
2401 UTAH AVENUE SOUTH
SEATTLE, WASHINGTON 98134
(206) 318-1575

THESE DRAWINGS AND THE PROJECT MANUAL ARE CONFIDENTIAL AND SHALL REMAIN THE SOLE PROPERTY OF STARBUCKS CORPORATION, WHICH IS THE OWNER OF THE COPYRIGHT IN THIS WORK. THEY SHALL NOT BE REPRODUCED (IN WHOLE OR IN PART), SHARED WITH THIRD PARTIES OR USED IN ANY MANNER ON OTHER PROJECTS OR EXTENSIONS TO THIS PROJECT WITHOUT THE PRIOR WRITTEN CONSENT OF STARBUCKS CORPORATION. THESE DRAWINGS AND SPECIFICATIONS ARE INTENDED TO EXPRESS DESIGN INTENT FOR A PROTOTYPICAL STARBUCKS STORE (WHICH IS SUBJECT TO CHANGE AT ANYTIME) AND DO NOT REFLECT ACTUAL SITE CONDITIONS. NEITHER PARTY SHALL HAVE ANY OBLIGATION NOR LIABILITY TO THE OTHER (EXCEPT STATED ABOVE) UNTIL A WRITTEN AGREEMENT IS FULLY EXECUTED BY BOTH PARTIES.

STARBUCKS TEMPLATE VERSION: i2024.01.01

PABLO GARCIA, AIA, REG. FL NO. AR99297

Gensler

MAIN OFFICE
M. ARTHUR GENSLER JR. & ASSOCIATES
FL QUALIFIERS LIC. NO. AR99486
45 FREMONT ST, SUITE 1500
SAN FRANCISCO, CA 94105 USA
Tel (415) 433.3700
Fax (415) 836.4599

SATELLITE OFFICE
M. ARTHUR GENSLER JR. & ASSOCIATES
540 NW 26TH ST
SUITE 250
MIAMI, FL 33127 USA
Tel (305) 350.7070
Fax (305) 350.7071

PROJECT NAME:
NW 43RD & 53RD

PROJECT ADDRESS:
5480 NW 43RD STREET
GAINESVILLE, FL 32653

STORE #:	10820
PROJECT #:	34769-081
ISSUE DATE:	03-22-2024
DESIGN MANAGER:	ROMINA VIGNOLO
PRODUCTION DESIGNER:	GENSLER
CHECKED BY:	GENSLER

Revision Schedule

Rev	Date	By	Description

SHEET TITLE:
DEMO EXTERIOR ELEVATIONS
SCALE: AS SHOWN

SHEET NUMBER:
D201

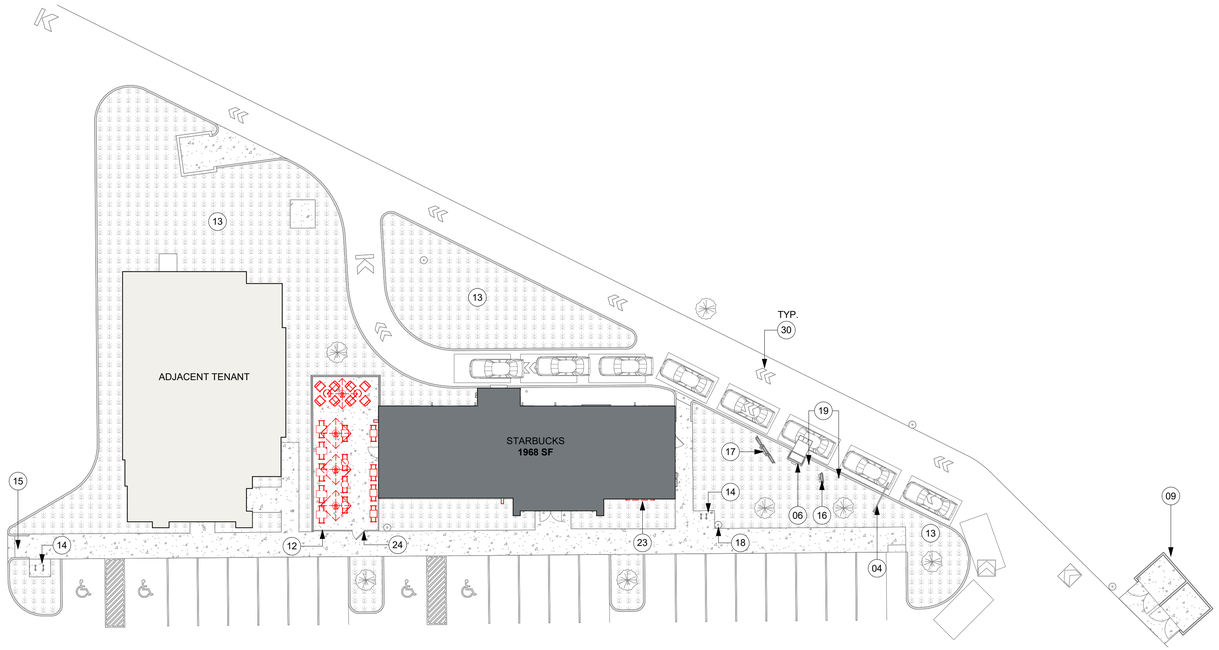

02 DEMOLITION SITE PLAN

Scale: 1" = 20'-0"

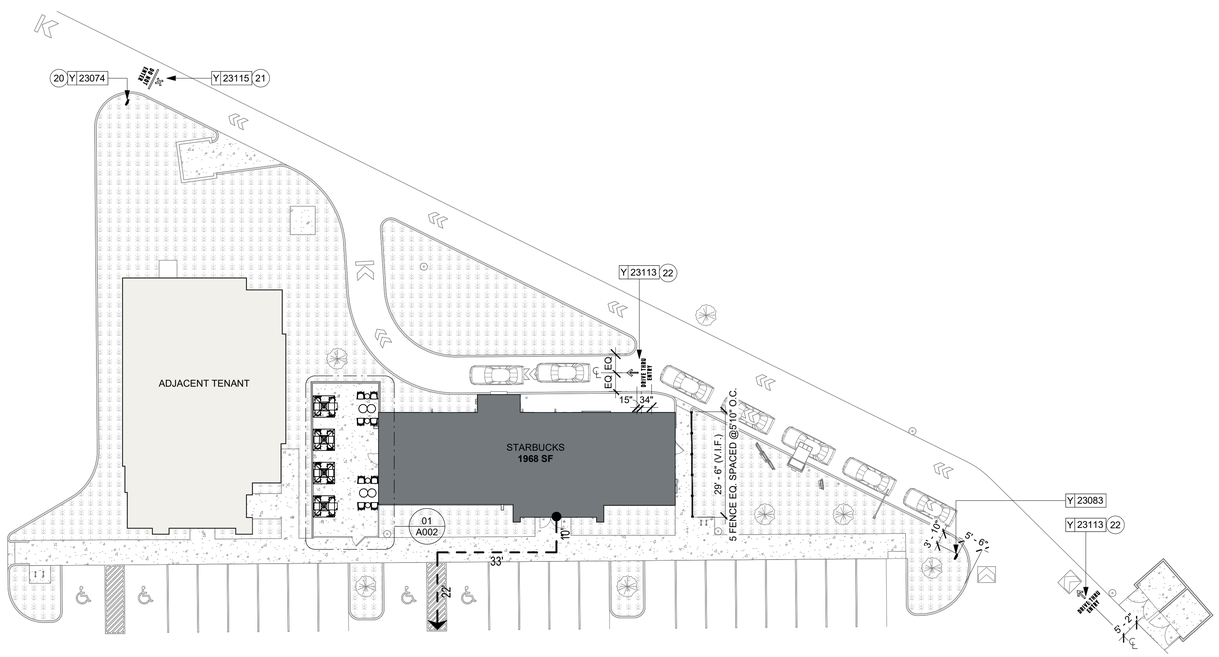

01 SITE PLAN

Scale: 1" = 20'-0"

KEYED NOTES

04 EXISTING STOP BAR.
06 EXISTING CANOPY/ AWNING.
09 EXISTING COVERED TRASH ENCLOSURE. CONCRETE APRON TOE XTEND BEYOND DUMPSTER GATES AS INDICATED, BY LL.
12 EXISTING PATIO RAILING.
13 EXISTING LANDSCAPE AREA BY LL.
14 EXISTING BIKE RACK.
15 EXISTING ACCESIBLE RAMP.
16 EXISTING DT PRE-MENU BOARD
17 EXISTING DIGITAL ORDER SCREEN AND CONTROL BOX.
18 EXISTING LIGHT POLE.
19 EXISTING NON-ILLUMINATED BOLLARD
20 DT DIRECTIONAL DO NOT ENTER/THANK YOU SIGN BY SB. CONCRETE FOOTING DESIGN BY SIGNAGE VENDOR, FURNISHED AND INSTALL BY LL. CONDUIT AND POWER BY LL.
21 NEW DRIVE-THRU "DO NOT ENTER" PAVEMENT SIGN
22 NEW DRIVE-THRU ENTRANCE PAVEMENT SIGN
23 DEMO GREEN WALL
24 LOCATION OF EXTERIOR OUTLETS. REFER TO ELECTRICAL SHEETS
30 EXISTING ACCESIBLE VERTICAL PARKING SIGNAGE.

GENERAL NOTES

A. REFER TO EXTERIOR ELEVATIONS ON SHEET A201 FOR BUILDING SIGNAGE LOCATION AND DESIGN ID. REFER TO ELECTRICAL PLANS FOR ELECTRICAL REQUIREMENTS.

B. LANDSCAPING TO BE PROVIDED PER ZONING CODE AND SUSTAINABILITY REQUIREMENTS.

C. GENERAL CONTRACTOR TO APPLY CONCRETE SEALER TO ALL EXTERIOR CONCRETE PATIO AND WALKWAY SURFACES.

D. GENERAL CONTRACTOR TO VERIFY ALL EXISTING ELEVATIONS AND BUILDING CONDITIONS IN FIELD PRIOR TO START OF CONSTRUCTION.

E. PROVIDE DETECTABLE WARNING (IF APPLICABLE PER LOCAL CODE) AT TRANSITION FROM SIDEWALK TO DRIVE AISLE.

F. ACCESSIBLE PARKING SPACES AND ACCESS AISLES SHALL HAVE SURFACE SLOPE NOT TO EXCEED 2% IN ALL DIRECTIONS.

G. REFER TO ELECTRICAL DRAWINGS FOR SITE RELATED ELECTRICAL WORK.

H. SCRAPE AND REPAINT ALL EXISTING PAINTED SITE FEATURES, INCLUDING, BUT NOT LIMITED TO CURBS, BOLLARDS, RAILINGS AND SITE LIGHTING BASES.

A. SEE SHEET A002 FOR ARCHITECTURAL SITE DETAILS.

LEGEND

EXISTING LANDSCAPE AREA
EXISTING CONCRETE WALKWAY
EXISTING 6" (150MM) CONCRETE CURB
EXISTING ASPHALT
EXISTING CONCRETE WITH INTEGRAL BLACK STAIN
ACCCESSIBLE PATH OF TRAVEL
PROPERTY LINE

RESPONSIBILITY LEGEND

FURNISHED BY	INSTALLED BY
GC - GENERAL CONTRACTOR	GC - GENERAL CONTRACTOR
SB - STARBUCKS WAREHOUSE / 3PL OR VENDOR DIRECT	SB - STARBUCKS WAREHOUSE / 3PL OR VENDOR DIRECT
	CV - VENDOR
LL - LANDLORD	LL - LANDLORD

SITE SCHEDULE - "Y"

DESIGN ID	COUNT	DESCRIPTION	FURN. BY	INST. BY	COMMENTS
FENCE					
X0901	5	ALUMINIUM SCREEN FENCING - VARIABLE WIDE X 46" HEIGHT	GC	SB/GC	FOR ORDERING CONTACT: SLEEKFENCE. CONTACT: 1 855-875-0855, SUPPORT@SLEEKFENCE.COM. REFER TO DETAILS FOR ADDITIONAL INFORMATION.GC TO COORD, W/SB VENDOR.
OTHER					
23113	2	GROUND GRAPHICS DT ENTRY STENCIL	SB	GC	REFERENCE PAINT 20511 FOR SPECIFICATIONS
23115	1	GROUND GRAPHICS DO NOT ENTER STENCIL	SB	GC	REFERENCE PAINT 20511 FOR SPECIFICATIONS
X0900	4	EXTERIOR ELECTRICAL OUTLET	GC	GC	REFER TO ELECTRICAL PLANS
UMBRELLA					
12147	4	UMBRELLA - BASE 95LB 43KG - FLAT BLACK MT0028	SB	GC	
20073	4	UMBRELLA - WITHOUT VALANCE - 6FT 183CM - GREEN CANVAS WITH WORDMARK F0056	SB	GC	

SIGNAGE SCHEDULE - "S"

DESIGN ID	COUNT	DESCRIPTION	FURN. BY	INST. BY	BULB	COMMENTS
SIGNAGE - DRIVE THRU						
23083	1	SIGN - DT DIRECTIONAL ARROW ILLUM DS - NEW FOUNDATION - 44IN 1120MM	SB	GC		

PERMIT SET - FOR CONSTRUCTION USE

© 2022 STARBUCKS COFFEE COMPANY

STARBUCKS®
2401 UTAH AVENUE SOUTH
SEATTLE, WASHINGTON 98134
(206) 318-1575

THESE DRAWINGS AND THE PROJECT MANUAL ARE CONFIDENTIAL AND SHALL REMAIN THE SOLE PROPERTY OF STARBUCKS CORPORATION, WHICH IS THE OWNER OF THE COPYRIGHT IN THIS WORK. THEY SHALL NOT BE REPRODUCED (IN WHOLE OR IN PART), SHARED WITH THIRD PARTIES OR USED IN ANY MANNER ON OTHER PROJECTS OR EXTENSIONS TO THIS PROJECT WITHOUT THE PRIOR WRITTEN CONSENT OF STARBUCKS CORPORATION. THESE DRAWINGS AND SPECIFICATIONS ARE INTENDED TO EXPRESS DESIGN INTENT FOR A PROTOTYPICAL STARBUCKS STORE (WHICH IS SUBJECT TO CHANGE AT ANYTIME) AND DO NOT REFLECT ACTUAL SITE CONDITIONS. NEITHER PARTY SHALL HAVE ANY OBLIGATION NOR LIABILITY TO THE OTHER (EXCEPT STATED ABOVE) UNTIL A WRITTEN AGREEMENT IS FULLY EXECUTED BY BOTH PARTIES.

STARBUCKS TEMPLATE VERSION: i2024.01.01

PABLO GARCIA, AIA, REG. FL NO. AR99297

Gensler
MAIN OFFICE
M. ARTHUR GENSLER JR. & ASSOCIATES
FL QUALIFIER'S LIC. NO. AR96486
45 FREMONT ST, SUITE 1500
SAN FRANCISCO, CA 94105 USA
Tel (415) 433.3700
Fax (415) 836.4599

SATELLITE OFFICE
M. ARTHUR GENSLER JR. & ASSOCIATES
540 NW 26TH ST
SUITE 250
MIAMI, FL 33127 USA
Tel (305) 350.7070
Fax (305) 350.7071

PROJECT NAME:
NW 43RD & 53RD

PROJECT ADDRESS:
5480 NW 43RD STREET
GAINESVILLE, FL 32653

STORE #: 10820
PROJECT #: 34769-081
ISSUE DATE: 03-22-2024
DESIGN MANAGER: ROMINA VIGNOLO
PRODUCTION DESIGNER: GENSLER
CHECKED BY: GENSLER

Revision Schedule

Rev	Date	By	Description

SHEET TITLE:
ARCHITECTURAL SITE PLAN
SCALE: AS SHOWN

SHEET NUMBER:
A001

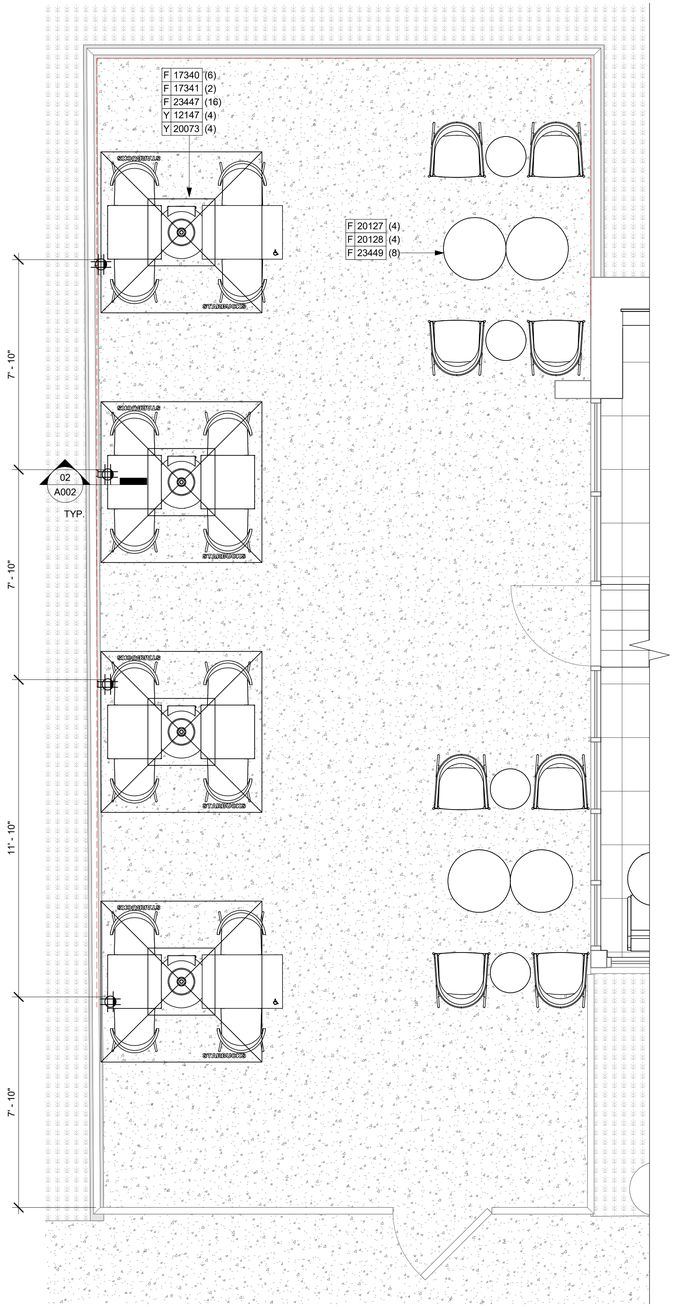

01 ENLARGED SITE PLAN DETAIL
Scale: 3/8" = 1'-0"

SIGNAGE SCHEDULE - "S"						
DESIGN ID	COUNT	DESCRIPTION	FURN. BY	INST. BY	BULB	COMMENTS
SIGNAGE - DRIVE THRU						
23083	1	SIGN - DT DIRECTIONAL ARROW ILLUM DS - NEW FOUNDATION - 44IN 1120MM	SB	GC		

SITE SCHEDULE - "Y"					
DESIGN ID	COUNT	DESCRIPTION	FURN. BY	INST. BY	COMMENTS
FENCE					
X0901	5	ALUMINIUM SCREEN FENCING - VARIABLE WIDE X 46" HEIGHT	GC	SB/GC	FOR ORDERING CONTACT: SLEEKFENCE. CONTACT: 1 855-875-0855, SUPPORT@SLEEKFENCE.COM. REFER TO DETAILS FOR ADDITIONAL INFORMATION.GC TO COORD, W/SB VENDOR.
OTHER					
23113	2	GROUND GRAPHICS DT ENTRY STENCIL	SB	GC	REFERENCE PAINT 20511 FOR SPECIFICATIONS
23115	1	GROUND GRAPHICS DO NOT ENTER STENCIL	SB	GC	REFERENCE PAINT 20511 FOR SPECIFICATIONS
X0900	4	EXTERIOR ELECTRICAL OUTLET	GC	GC	REFER TO ELECTRICAL PLANS
UMBRELLA					
12147	4	UMBRELLA - BASE 95LB 43KG - FLAT BLACK MT0028	SB	GC	
20073	4	UMBRELLA - WITHOUT VALANCE - 6FT 183CM - GREEN CANVAS WITH WORDMARK F0056	SB	GC	

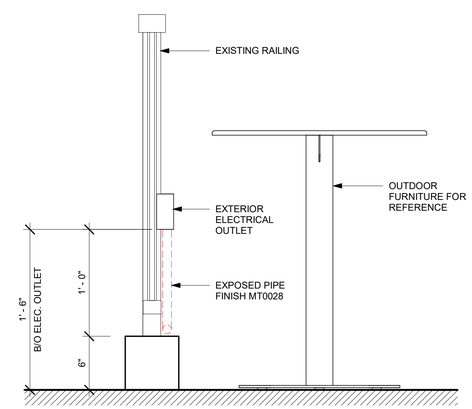

02 ELEVATION ELECTRICAL OUTLET
Scale: 1 1/2" = 1'-0"

PERMIT SET - FOR CONSTRUCTION USE

© 2022 STARBUCKS COFFEE COMPANY

STARBUCKS®
2401 UTAH AVENUE SOUTH
SEATTLE, WASHINGTON 98134
(206) 318-1575

THESE DRAWINGS AND THE PROJECT MANUAL ARE CONFIDENTIAL AND SHALL REMAIN THE SOLE PROPERTY OF STARBUCKS CORPORATION, WHICH IS THE OWNER OF THE COPYRIGHT IN THIS WORK. THEY SHALL NOT BE REPRODUCED (IN WHOLE OR IN PART), SHARED WITH THIRD PARTIES OR USED IN ANY MANNER ON OTHER PROJECTS OR EXTENSIONS TO THIS PROJECT WITHOUT THE PRIOR WRITTEN CONSENT OF STARBUCKS CORPORATION. THESE DRAWINGS AND SPECIFICATIONS ARE INTENDED TO EXPRESS DESIGN INTENT FOR A PROTOTYPICAL STARBUCKS STORE (WHICH IS SUBJECT TO CHANGE AT ANYTIME) AND DO NOT REFLECT ACTUAL SITE CONDITIONS. NEITHER PARTY SHALL HAVE ANY OBLIGATION NOR LIABILITY TO THE OTHER (EXCEPT STATED ABOVE) UNTIL A WRITTEN AGREEMENT IS FULLY EXECUTED BY BOTH PARTIES.

STARBUCKS TEMPLATE VERSION: i2024.01.01

PABLO GARCIA, AIA, REG. FL NO. AR99297

Gensler
MAIN OFFICE
M. ARTHUR GENSLER JR. & ASSOCIATES
FL QUALIFIERS LIC. NO. AR99486
45 FREMONT ST, SUITE 1500
SAN FRANCISCO, CA 94105 USA
Tel (415) 433.3700
Fax (415) 836.4599

SATELLITE OFFICE
M. ARTHUR GENSLER JR. & ASSOCIATES
545 NW 26TH ST
SUITE 250
MIAMI, FL 33127 USA
Tel (305) 350.7070
Fax (305) 350.7071

PROJECT NAME:
NW 43RD & 53RD

PROJECT ADDRESS:
5480 NW 43RD STREET
GAINESVILLE, FL 32653

STORE #:	10820
PROJECT #:	34769-081
ISSUE DATE:	03-22-2024
DESIGN MANAGER:	ROMINA VIGNOLO
PRODUCTION DESIGNER:	GENSLER
CHECKED BY:	GENSLER

Revision Schedule

Rev	Date	By	Description

SHEET TITLE:
ARCHITECTURAL SITE ENLARGED
SCALE: AS SHOWN

SHEET NUMBER:
A002

KEYED NOTES

01 ICE MACHINE ROOF TOP CONDENSER

GENERAL NOTES

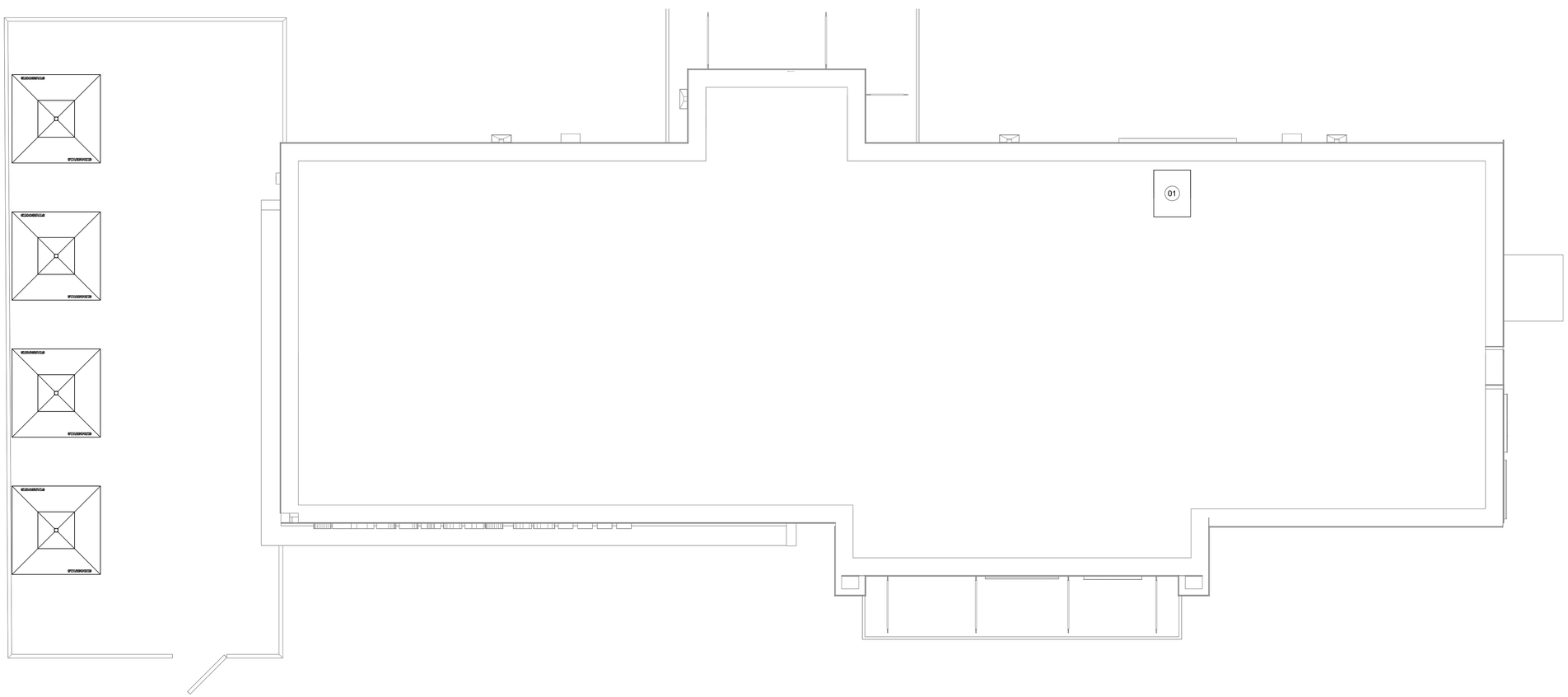

01 ROOF PLAN
Scale: 1/4" = 1'-0"

N

PERMIT SET - FOR CONSTRUCTION USE

© 2022 STARBUCKS COFFEE COMPANY

STARBUCKS®
2401 UTAH AVENUE SOUTH
SEATTLE, WASHINGTON 98134
(206) 318-1575

THESE DRAWINGS AND THE PROJECT MANUAL ARE CONFIDENTIAL AND SHALL REMAIN THE SOLE PROPERTY OF STARBUCKS CORPORATION, WHICH IS THE OWNER OF THE COPYRIGHT IN THIS WORK. THEY SHALL NOT BE REPRODUCED (IN WHOLE OR IN PART), SHARED WITH THIRD PARTIES OR USED IN ANY MANNER ON OTHER PROJECTS OR EXTENSIONS TO THIS PROJECT WITHOUT THE PRIOR WRITTEN CONSENT OF STARBUCKS CORPORATION. THESE DRAWINGS AND SPECIFICATIONS ARE INTENDED TO EXPRESS DESIGN INTENT FOR A PROTOTYPICAL STARBUCKS STORE (WHICH IS SUBJECT TO CHANGE AT ANYTIME) AND DO NOT REFLECT ACTUAL SITE CONDITIONS. NEITHER PARTY SHALL HAVE ANY OBLIGATION NOR LIABILITY TO THE OTHER (EXCEPT STATED ABOVE) UNTIL A WRITTEN AGREEMENT IS FULLY EXECUTED BY BOTH PARTIES.

STARBUCKS TEMPLATE VERSION: i2024.01.01

PABLO GARCIA, AIA, REG. FL NO. AR99297

Gensler

MAIN OFFICE
M. ARTHUR GENSLER JR. & ASSOCIATES
FL QUALIFIERS LIC. NO. AR99486
45 FREMONT ST, SUITE 1500
SAN FRANCISCO, CA 94105 USA
Tel (415) 433.3700
Fax (415) 836.4599

SATELLITE OFFICE
M. ARTHUR GENSLER JR. & ASSOCIATES
540 NW 26TH ST
SUITE 200
MIAMI, FL 33127 USA
Tel (305) 350.7070
Fax (305) 350.7071

PROJECT NAME:
NW 43RD & 53RD

PROJECT ADDRESS:
5480 NW 43RD STREET
GAINESVILLE, FL 32653

STORE #:	10820
PROJECT #:	34769-081
ISSUE DATE:	03-22-2024
DESIGN MANAGER:	ROMINA VIGNOLO
PRODUCTION DESIGNER:	GENSLER
CHECKED BY:	GENSLER

Revision Schedule

Rev	Date	By	Description

SHEET TITLE:
ROOF PLAN

SCALE: AS SHOWN

SHEET NUMBER:
A003

INTERIOR WALL SCHEDULE

TAG	DESCRIPTION	INSULATION	NOTES
2-T-N	3 5/8" 20 GA STUDS @ 16" O.C. FURRING WALL	NONE	TERMINATE 6" ABOVE CEILING. SEE PLAN FOR WALL SHEATHING.
3-T-N	3 5/8" 20 GA STUDS @ 16" O.C.	NONE	TERMINATE 6" ABOVE CEILING. PROVIDE 45 DEGREE METAL STUD BRACING AT 48" O.C. FROM STUD WALL TO STRUCTURE ABOVE. SEE PLAN FOR WALL SHEATHING.
4-P-N	6" 16 GA STUDS @ 16" O.C.	NONE	PARTIAL HT. WALL W/ RCKW RIGID CONNECTORS AT FLOOR. SEE ELEVATIONS FOR WALL HT. SEE PLAN FOR WALL SHEATHING.
4-T-N	6" 20 GA STUDS @ 16" O.C.	NONE	TERMINATE 6" ABOVE CEILING. PROVIDE 45 DEGREE METAL STUD BRACING AT 48" O.C. FROM STUD WALL TO STRUCTURE ABOVE. SEE PLAN FOR WALL SHEATHING.
5-T-N	6" 20 GA STUDS @ 16" O.C.	NONE	TERMINATE 6" ABOVE CEILING. PROVIDE 45 DEGREE METAL STUD BRACING AT 48" O.C. FROM STUD WALL TO STRUCTURE ABOVE. SEE PLAN FOR WALL SHEATHING.
6-T-N	3 5/8" 20 GA STUDS @ 16" O.C.	NONE	TERMINATE 6" ABOVE CEILING. PROVIDE 45 DEGREE METAL STUD BRACING AT 48" O.C. FROM STUD WALL TO STRUCTURE ABOVE. SEE PLAN FOR WALL SHEATHING.

WALL BLOCKING KEY

SYMBOL	ITEM	WEIGHT	HEIGHT A.F.F.	APPROX. WIDTH
A	SHELVES AT MANAGER'S DESK	300 LBS (136 KG)	32" TO 96" (810MM TO 2440MM)	48" (1220MM) 3/4 (19MM) ACX PLYWOOD, CENTERED ON SHELVES
B	EQUIPMENT RACK AT MANAGER'S DESK	300 LBS (136 KG)	44" TO 96" (1120MM TO 2440MM)	28" (710MM) 3/4 (19MM) ACX PLYWOOD, CENTERED ON RACK
C	UPPER CBE SHELVING	BLOCKING SPECIFICATION FOR CBE METAL SHELVES. REFER TO VENDOR'S SPECIFICATION AND DETAILS.		
D	ADAPTABLE CASEWORK	BLOCKING SPECIFICATION FOR ADAPTABLE CASEWORK. REFER TO VENDOR'S SPECIFICATION AND DETAILS.		
N	ALL ARTWORK, FIXTURES, ACCESSORIES AND CASEWORK FABRICATIONS NOT OTHERWISE NOTED	TBD BY VENDOR (VARIES)	GC TO PROVIDE WALL BLOCKING AS REQUIRED FOR ALL ITEMS FOR A COMPLETE AND SECURE INSTALLATION. EXTEND BLOCKING 8" (205MM) BEYOND ON EACH SIDE OF EACH ITEM.	

WALL SHEATHING KEY

SYMBOL	DESCRIPTION
▲	INDICATES SHEATHING TRANSITION
A	5/8" GYP. WALL BOARD (FULL WALL HEIGHT)
B	5/8" GYP. WALL BOARD (TERMINATE AT 6" (150MM) ABOVE CEILING)
C	5/8" CEMENTITIOUS BACKER BOARD (TERMINATE AT 6" (150MM) ABOVE CEILING)
D	5/8" CEMENTITIOUS BACKER BOARD (TERMINATE AT FINISH TRANSITION AS SHOWN ON INTERIOR ELEVATION W/ 5/8" GYP. WALL BOARD ABOVE (FULL WALL HEIGHT)).
E	5/8" PLYWOOD (TERMINATE AT 6" (150MM) ABOVE CEILING)

KEYED NOTES

01 EXISTING STOREFRONT WINDOW SYSTEM. GC TO PROTECT DURING CONSTRUCTION. CLEAN TO "LIKE NEW" CONDITION AND REPAIR AS NECESSARY.
02 EXISTING SINGLE EXIT DOOR. GC TO ENSURE PROPER WORKING ORDER AND REPAIR AS NECESSARY. REPLACE HARDWARE AS REQUIRED.
03 EXISTING SHELF FOR WATER HEATER ABOVE.
04 ELECTRICAL PANEL LOCATIONS. MAINTAIN MINIMUM CLEARANCE AS REQUIRED BY CODE.
05 FIRE EXTINGUISHER LOCATION.
06 OUTLINE OF BAR PER CASEWORK MANUFACTURER. FOR THE BACK BAR, PROVIDE 3/4" BLOCKING TO 34" AFF FOR ALL WALL BRACKETS TO SUPPORT CASEWORK LEGS.
07 BANQUETTES WITH POWER. REFER TO DETAIL.
08 OUTLINE OF SOFFIT ABOVE.
12 LOCATION OF RECESSED WALK OFF MAT. GC TO SAW CUT, CHIP AND PATCH FLOOR AS REQUIRED FOR INSTALLATION, TO BE FLUSH WITH EXISTING FLOOR FINISH. REFER TO I104
14 NEW DOORS TO COMPLY WITH ADA STANDARDS. ENTRANCE THRESHOLD TO COMPLY WITH CODE.
19 EXISTING STOREFRONT DOOR. GC TO ENSURE PROPER WORKING ORDER AND REPAIR AS NECESSARY. REPLACE HARDWARE AS SHOWN IN MAIN ENTRANCE.
21 OUTLINE OF COMMUNITY TABLE.

GENERAL NOTES

A. GENERAL CONTRACTOR TO VERIFY ALL DIMENSIONS AND NOTIFY STARBUCKS CONSTRUCTION MANAGER OF ANY DISCREPANCIES PRIOR TO CONSTRUCTION. ALL DIMENSIONS TO BE TAKEN FROM DESIGNATED DATUM POINT.

B. GENERAL CONTRACTOR TO PROVIDE FIRE TREATED 2X WOOD BLOCKING OR EQUIVALENT FOR COMPLETE AND SECURE SUPPORT OF ANY WALL MOUNTED EQUIPMENT, CABINETRY, FURNISHINGS, ARTWORK AND/OR SIGNAGE.

C. IF EXISTING EXTERIOR ENTRANCE THRESHOLD EXCEEDS MINIMUM BARRIER FREE PROVISION OF THE CODE, REMOVE AND REPLACE WITH ACCESSIBLE THRESHOLD. RAISED THRESHOLDS AND FLOOR LEVEL CHANGES AT ACCESSIBLE DOORWAYS TO BE BEVELED WITH A SLOPE NO GREATER THAN 1:12.

D. ALL DIMENSIONS ARE TO FINISHED FACE UNLESS SHOWN OR NOTED OTHERWISE.

E. INSTALL MOISTURE RESISTANT GREEN BOARD ON BACKBAR WALL PER PROJECT MANUAL.

F. ALL DOORS SHALL BE 32" (815MM) MINIMUM CLEAR OPENING WHEN OPENED TO 90 DEGREE POSITION UNLESS OTHERWISE NOTED.

G. SEE SHEET A601 FOR EXTERIOR DOOR AND WINDOW SCHEDULES.

H. STARBUCKS VENDOR TO PROVIDE DOOR HARDWARE COMPONENTS AND GC TO INSTALL.

I. VERIFY ALL EXISTING DOORS, HARDWARE AND FRAMES MEET STARBUCKS AND/OR CODE REQUIREMENTS.

J. PATCH AND REPAIR EXISTING DRYWALLS AS NEW.

K. PROVIDE FIRE EXTINGUISHERS AS NOTED ON THE APPROVED PLANS FROM THE CITY.

L. SEE SHEET A501 AND A502 FOR BUILDING DETAILS.

M. REFER TO SHEET I104 FOR FLOOR FINISHES.

GENERAL LEGEND

- NEW FULL HEIGHT WALL
- NEW LIGHT GAUGE WALL
- NEW PARTIAL HEIGHT WALL
- EXISTING WALL
- NEW CONCRETE FILL SLAB
- WALL BLOCKING CALL-OUT
- WALL SHEATHING CALL-OUT
- DOOR TAG
- INTERIOR WALL TAG

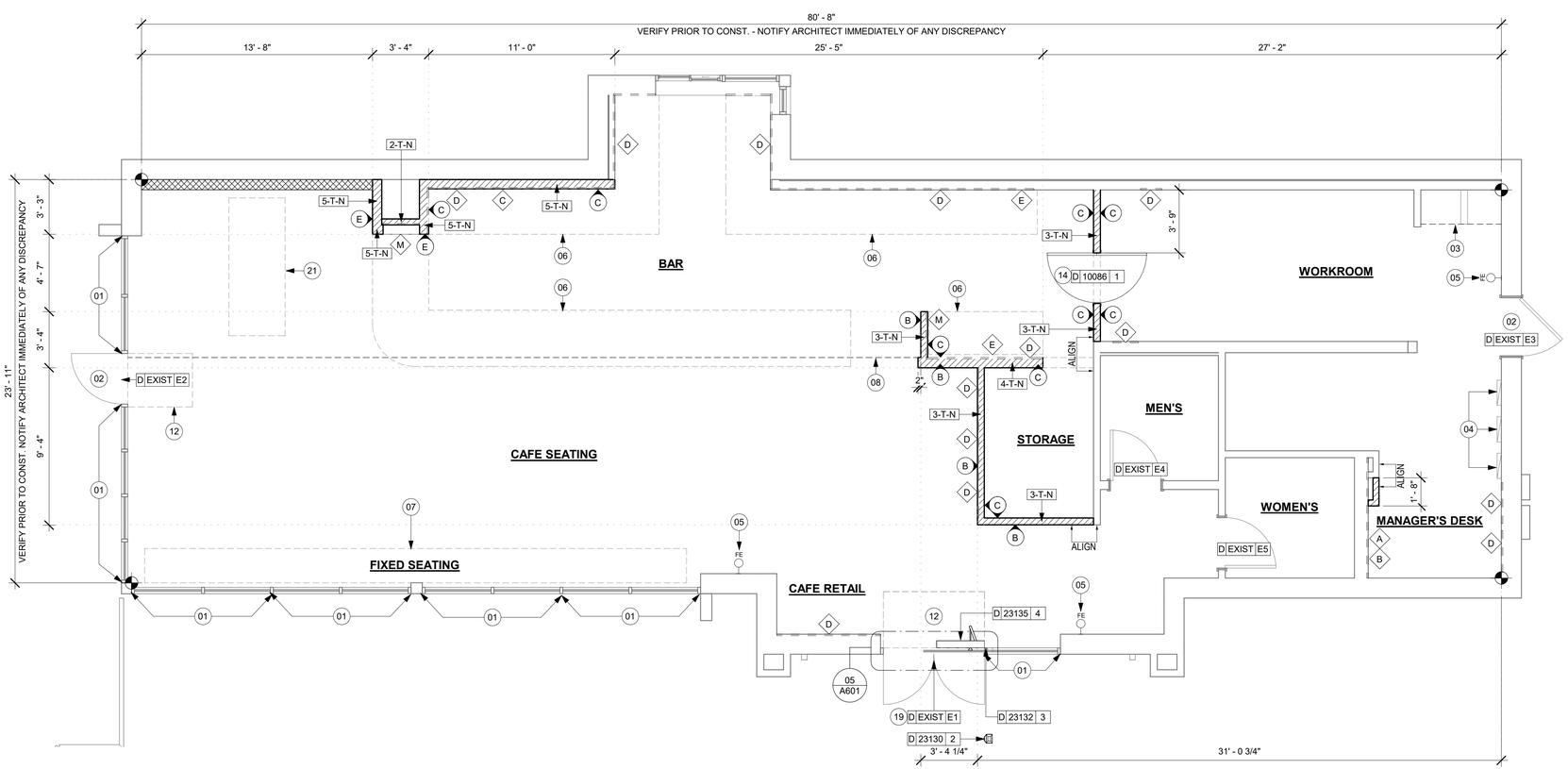

01 BUILDING FLOOR PLAN
Scale: 1/4" = 1'-0"

PERMIT SET - FOR CONSTRUCTION USE

© 2022 STARBUCKS COFFEE COMPANY

STARBUCKS®
2401 UTAH AVENUE SOUTH
SEATTLE, WASHINGTON 98134
(206) 318-1575

THESE DRAWINGS AND THE PROJECT MANUAL ARE CONFIDENTIAL AND SHALL REMAIN THE SOLE PROPERTY OF STARBUCKS CORPORATION, WHICH IS THE OWNER OF THE COPYRIGHT IN THIS WORK. THEY SHALL NOT BE REPRODUCED (IN WHOLE OR IN PART), SHARED WITH THIRD PARTIES OR USED IN ANY MANNER ON OTHER PROJECTS OR EXTENSIONS TO THIS PROJECT WITHOUT THE PRIOR WRITTEN CONSENT OF STARBUCKS CORPORATION. THESE DRAWINGS AND SPECIFICATIONS ARE INTENDED TO EXPRESS DESIGN INTENT FOR A PROTOTYPICAL STARBUCKS STORE (WHICH IS SUBJECT TO CHANGE AT ANYTIME) AND DO NOT REFLECT ACTUAL SITE CONDITIONS. NEITHER PARTY SHALL HAVE ANY OBLIGATION NOR LIABILITY TO THE OTHER (EXCEPT STATED ABOVE) UNTIL A WRITTEN AGREEMENT IS FULLY EXECUTED BY BOTH PARTIES.

STARBUCKS TEMPLATE VERSION: i2024.01.01

PABLO GARCIA, AIA, REG. FL NO. AR99297

Gensler
MAIN OFFICE
M. ARTHUR GENSLER JR. & ASSOCIATES
FL QUALIFIER'S LIC. NO. AR99486
45 FREMONT ST, SUITE 1500
SAN FRANCISCO, CA 94105 USA
Tel (415) 433.3700
Fax (415) 836.4599

SATELLITE OFFICE
M. ARTHUR GENSLER JR. & ASSOCIATES
545 NW 26TH ST
SUITE 200
MIAMI, FL 33127 USA
Tel (305) 350.7070
Fax (305) 350.7071

PROJECT NAME:
NW 43RD & 53RD

PROJECT ADDRESS:
5480 NW 43RD STREET
GAINESVILLE, FL 32653

STORE #:	10820
PROJECT #:	34769-081
ISSUE DATE:	03-22-2024
DESIGN MANAGER:	ROMINA VIGNOLO
PRODUCTION DESIGNER:	GENSLER
CHECKED BY:	GENSLER

Revision Schedule

Rev	Date	By	Description

SHEET TITLE:
BUILDING FLOOR PLAN

SCALE: AS SHOWN

SHEET NUMBER:
A101

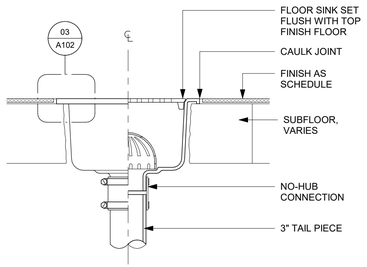

02 FLOOR SINK SECTION
Scale: 3" = 1'-0"

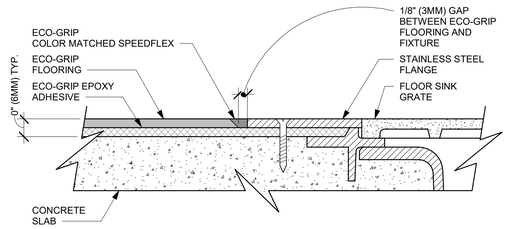

03 ECO-GRIP TO FLOOR SINK TRANSITION
Scale: 12" = 1'-0"

KEYED NOTES

01 OUTLINE OF ENGINE FOR REFERENCE.
02 PROPOSED LOCATION OF CASEWORK DIEWALL. GC TO COORDINATE WITH CASEWORK VENDOR FOR LOCATION ON SITE.
03 DEPRESSED SLAB FOR RECESSED WALK-OFF MAT.
04 BANQUETTES WITH POWER. FLOOR ELECTRICAL OUTLET. SEE ELECTRICAL SHEETS. REFER TO DETAIL.
05 LOCATION OF POWER AND DATA OUTLETS BEHIND MENU BOARDS. CENTER OUTLETS BEHIND MENU BOARDS.
06 DEMOLISHED FLOOR SINK LOCATION FOR REFERENCE ONLY.
07 DEMOLISHED FLOOR DRAIN FOR REFERENCE ONLY.
08 COMMUNITY TABLE WITH POWER.
09 HAND SINK LOCATION.
10 EXISTING FLOOR SINK TO REMAIN
11 FLOOR ELECTRICAL OUTLET. SEE ELECTRICAL SHEETS.

GENERAL NOTES

A. ALL STUB-UP DIMENSIONS ARE RELATIVE TO FINISHED WALL LOCATIONS (SHOWN AS OUTLINES ON THIS PLAN). REFER TO FLOOR PLAN FOR WALL PLACEMENT.

B. FLOOR SINK: REFER TO CUT SHEETS FOR COMPONENT SPECIFICATIONS AND CUTOUT REQUIREMENTS.

C. WASTE LINE PENETRATIONS: REFER TO PLUMBING PLANS FOR INDIVIDUAL LINE LOCATIONS.

D. STUB-UP PENETRATIONS: REFER TO ELECTRICAL AND PLUMBING PLANS FOR INDIVIDUAL STUB-UP LOCATIONS.

E. TOILET FLOOR PENETRATION: REFER TO CUT SHEETS FOR STUB-UP LOCATION RELATIVE TO FINISHED WALL.

F. PENETRATION TO BE LOCATED ON CENTERLINE OF WALL OR AS REQUIRED PER CONDITIONS.

G. TRENCHING OUTLINE FOR GUIDELINE USE ONLY. GENERAL CONTRACTOR TO COORDINATE WITH SPECIFIC TRADES AND SITE CONDITIONS TO DETERMINE ACTUAL LAYOUT.

H. REFER TO SHEET I101 FOR FLOOR FINISHES.

I. DEMOLISH AND FILL IN ANY EXISTING FLOOR SINKS THAT ARE NOT SHOWN ON THE NEW PLAN

LEGEND

- EXISTING WALL
- EXISTING CONCRETE LEAVE-OUT, GC TO ADD CONCRETE SLAB ON GRADE AFTER INSTALLATIONS, AS PER STRUCTURAL DRAWINGS.
- DATUM POINT
- FLOOR DRAIN
- FLOOR CLEAN-OUT
- FLOOR SINK
- WASTE LINE PENETRATION
- PLUMBING STUB-UP PENETRATION
- ELECTRICAL STUB-UP PENETRATION

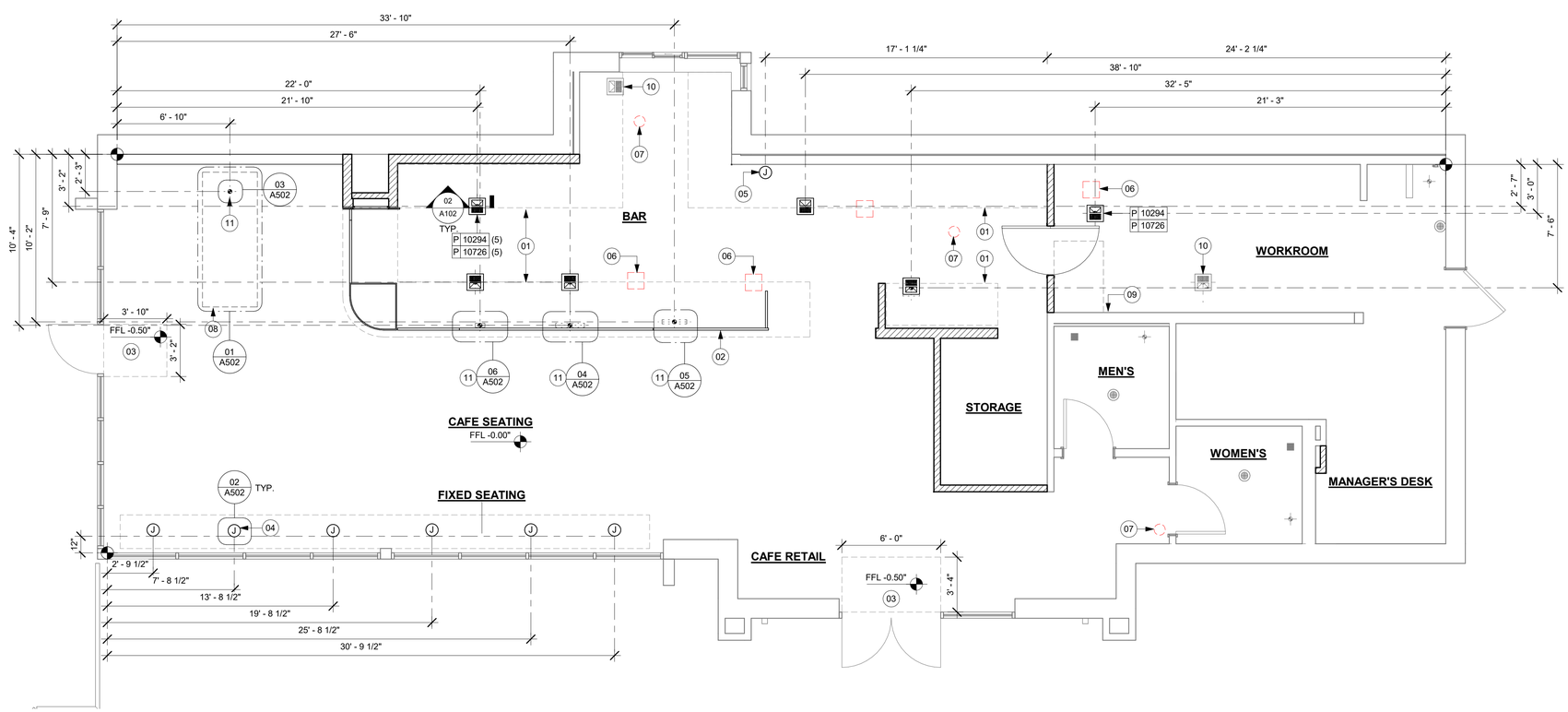

01 FLOOR PENETRATION PLAN
Scale: 1/4" = 1'-0"

PERMIT SET - FOR CONSTRUCTION USE

© 2022 STARBUCKS COFFEE COMPANY

STARBUCKS®
2401 UTAH AVENUE SOUTH
SEATTLE, WASHINGTON 98134
(206) 318-1575

THESE DRAWINGS AND THE PROJECT MANUAL ARE CONFIDENTIAL AND SHALL REMAIN THE SOLE PROPERTY OF STARBUCKS CORPORATION, WHICH IS THE OWNER OF THE COPYRIGHT IN THIS WORK. THEY SHALL NOT BE REPRODUCED (IN WHOLE OR IN PART), SHARED WITH THIRD PARTIES OR USED IN ANY MANNER ON OTHER PROJECTS OR EXTENSIONS TO THIS PROJECT WITHOUT THE PRIOR WRITTEN CONSENT OF STARBUCKS CORPORATION. THESE DRAWINGS AND SPECIFICATIONS ARE INTENDED TO EXPRESS DESIGN INTENT FOR A PROTOTYPICAL STARBUCKS STORE (WHICH IS SUBJECT TO CHANGE AT ANYTIME) AND DO NOT REFLECT ACTUAL SITE CONDITIONS. NEITHER PARTY SHALL HAVE ANY OBLIGATION NOR LIABILITY TO THE OTHER (EXCEPT STATED ABOVE) UNTIL A WRITTEN AGREEMENT IS FULLY EXECUTED BY BOTH PARTIES.

STARBUCKS TEMPLATE VERSION: i2024.01.01

PABLO GARCIA, AIA, REG. FL NO. AR99297

Gensler
MAIN OFFICE
M. ARTHUR GENSLER JR. & ASSOCIATES
FL QUALIFIER'S LIC. NO. AR96486
45 FREMONT ST, SUITE 1500
SAN FRANCISCO, CA 94105 USA
Tel (415) 433.3700
Fax (415) 836.4599

SATELLITE OFFICE
M. ARTHUR GENSLER JR. & ASSOCIATES
545 NW 26TH ST
SUITE 250
MIAMI, FL 33127 USA
Tel (305) 350.7070
Fax (305) 350.7071

PROJECT NAME:
NW 43RD & 53RD

PROJECT ADDRESS:
5480 NW 43RD STREET
GAINESVILLE, FL 32653

STORE #:	10820
PROJECT #:	34769-081
ISSUE DATE:	03-22-2024
DESIGN MANAGER:	ROMINA VIGNOLO
PRODUCTION DESIGNER:	GENSLER
CHECKED BY:	GENSLER

Revision Schedule

Rev	Date	By	Description

SHEET TITLE:
BUILDING FLOOR PENETRATION PLAN
SCALE: AS SHOWN

SHEET NUMBER:
A102

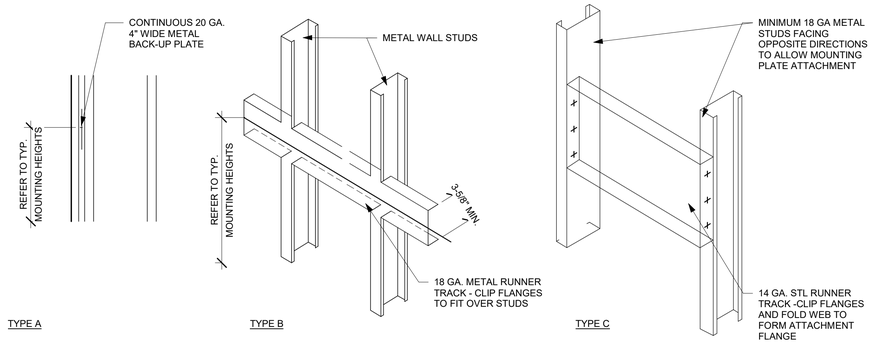

01 BLOCKING DETAIL
Scale: 1/2" = 1'-0"

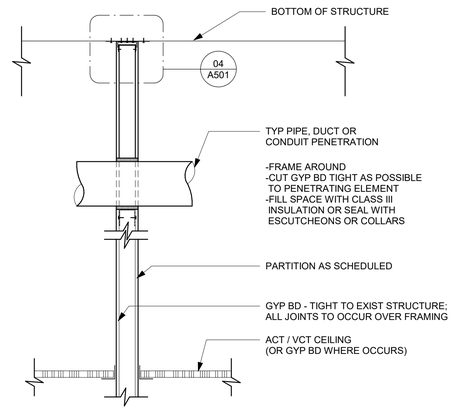

02 PIPE PENETRATION DETAIL
Scale: 3/4" = 1'-0"

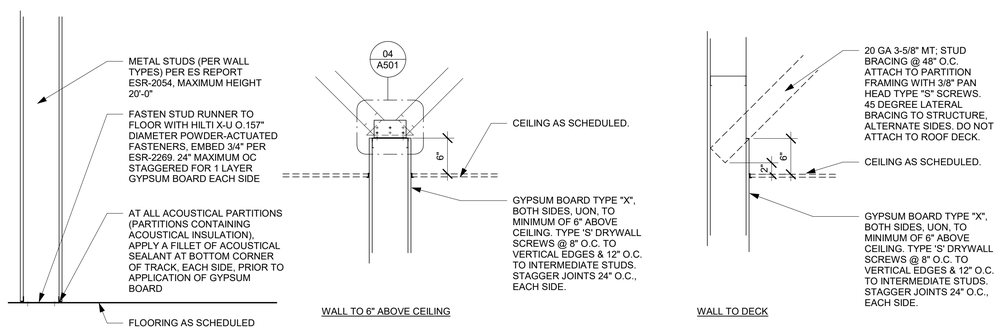

03 NEW PARTITION WALL SECTION
Scale: 1" = 1'-0"

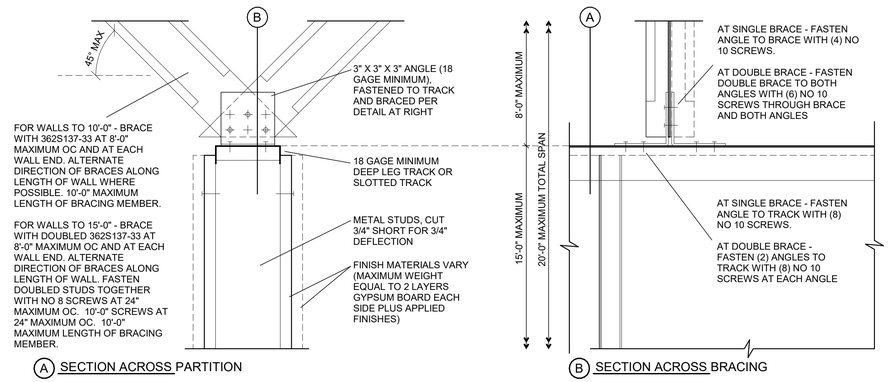

A SECTION ACROSS PARTITION
B SECTION ACROSS BRACING

04 TOP OF PARTITION WHERE BRACED TO STRUCTURE ABOVE - SEISMIC
Scale: 3" = 1'-0"

PERMIT SET - FOR CONSTRUCTION USE

© 2022 STARBUCKS COFFEE COMPANY

STARBUCKS®
2401 UTAH AVENUE SOUTH
SEATTLE, WASHINGTON 98134
(206) 318-1575

THESE DRAWINGS AND THE PROJECT MANUAL ARE CONFIDENTIAL AND SHALL REMAIN THE SOLE PROPERTY OF STARBUCKS CORPORATION, WHICH IS THE OWNER OF THE COPYRIGHT IN THIS WORK. THEY SHALL NOT BE REPRODUCED (IN WHOLE OR IN PART), SHARED WITH THIRD PARTIES OR USED IN ANY MANNER ON OTHER PROJECTS OR EXTENSIONS TO THIS PROJECT WITHOUT THE PRIOR WRITTEN CONSENT OF STARBUCKS CORPORATION. THESE DRAWINGS AND SPECIFICATIONS ARE INTENDED TO EXPRESS DESIGN INTENT FOR A PROTOTYPICAL STARBUCKS STORE (WHICH IS SUBJECT TO CHANGE AT ANYTIME) AND DO NOT REFLECT ACTUAL SITE CONDITIONS. NEITHER PARTY SHALL HAVE ANY OBLIGATION NOR LIABILITY TO THE OTHER (EXCEPT STATED ABOVE) UNTIL A WRITTEN AGREEMENT IS FULLY EXECUTED BY BOTH PARTIES.

STARBUCKS TEMPLATE VERSION: i2024.01.01

PABLO GARCIA, AIA, REG. FL NO. AR99297

Gensler
MAIN OFFICE
M. ARTHUR GENSLER JR. & ASSOCIATES
FL QUALIFIER'S LIC. NO. AR96486
40 FREMONT ST, SUITE 1500
SAN FRANCISCO, CA 94105 USA
Tel (415) 433.3700
Fax (415) 836.4599

SATELLITE OFFICE
M. ARTHUR GENSLER JR. & ASSOCIATES
545 NW 26TH ST
SUITE 250
MIAMI, FL 33127 USA
Tel (305) 350.7070
Fax (305) 350.7071

PROJECT NAME:
NW 43RD & 53RD

PROJECT ADDRESS:
5480 NW 43RD STREET
GAINESVILLE, FL 32653

STORE #:	10820
PROJECT #:	34769-081
ISSUE DATE:	03-22-2024
DESIGN MANAGER:	ROMINA VIGNOLO
PRODUCTION DESIGNER:	GENSLER
CHECKED BY:	GENSLER

Revision Schedule

Rev	Date	By	Description

SHEET TITLE:
WALL FRAMING DETAILS

SCALE: AS SHOWN

SHEET NUMBER:
A501

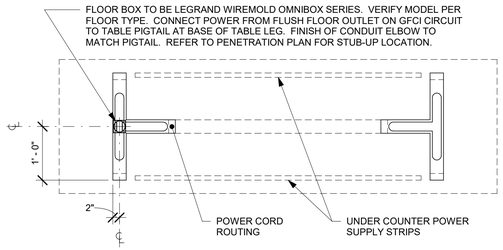

01 TABLE - ANGLED BASE COMMUNITY
Scale: 3/4" = 1'-0"

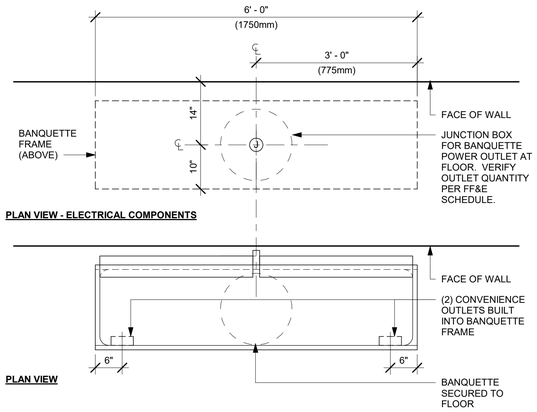

02 BANQUETTE - ORION - ELECTRICAL
Scale: 3/4" = 1'-0"

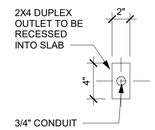

03 STUB UP AT COMMUNITY TABLE
Scale: 1 1/2" = 1'-0"

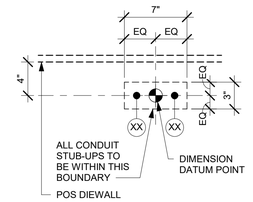

ESPRESSO BAR PLUMBING STUB-UP KEY	
1	CWF STUB-UP
2	CW STUB-UP

NOTE: SEE SHEET A102 - BUILDING FLOOR PENETRATION PLAN FOR FINAL DIMENSIONED LOCATION.

04 PLUMBING STUB-UPS AT ESPRESSO BAR
Scale: 1 1/2" = 1'-0"

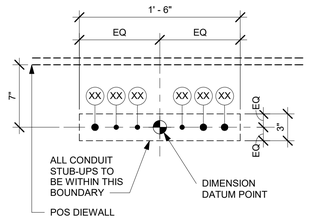

POS ELECTRICAL STUB-UP KEY	
1	3/4" POWER CONDUIT TO ELECTRICAL PANEL
2	1/2" PHONE TO MANAGER'S DESK
3	1/2" DATA CONDUIT TO MANAGER'S DESK
4	1/2" SECURITY TO MANAGER'S DESK
5	3/4" LAN CONDUIT TO POS/SAFE
6	3/4" POWER CONDUIT FOR PASTRY CASE

NOTE: SEE SHEET A102 - BUILDING FLOOR PENETRATION PLAN FOR FINAL DIMENSIONED LOCATION.

05 ELECTRICAL STUB-UPS AT POS
Scale: 1 1/2" = 1'-0"

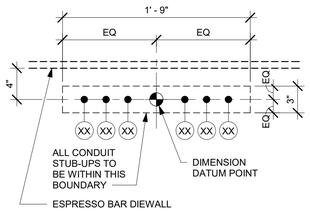

ESPRESSO BAR ELECTRICAL STUB-UP KEY	
1	3/4" LAN CONDUIT
2	3/4" LAN CONDUIT TO MANAGER'S WORKSTATION
3	3/4" ISOLATED GROUND POWER CONDUIT

NOTE: SEE SHEET A102 - BUILDING FLOOR PENETRATION PLAN FOR FINAL DIMENSIONED LOCATION.

06 ELECTRICAL STUB-UPS AT ESPRESSO BAR
Scale: 1 1/2" = 1'-0"

PERMIT SET - FOR CONSTRUCTION USE

© 2022 STARBUCKS COFFEE COMPANY

STARBUCKS®
2401 UTAH AVENUE SOUTH
SEATTLE, WASHINGTON 98134
(206) 318-1575

THESE DRAWINGS AND THE PROJECT MANUAL ARE CONFIDENTIAL AND SHALL REMAIN THE SOLE PROPERTY OF STARBUCKS CORPORATION, WHICH IS THE OWNER OF THE COPYRIGHT IN THIS WORK. THEY SHALL NOT BE REPRODUCED (IN WHOLE OR IN PART), SHARED WITH THIRD PARTIES OR USED IN ANY MANNER ON OTHER PROJECTS OR EXTENSIONS TO THIS PROJECT WITHOUT THE PRIOR WRITTEN CONSENT OF STARBUCKS CORPORATION. THESE DRAWINGS AND SPECIFICATIONS ARE INTENDED TO EXPRESS DESIGN INTENT FOR A PROTOTYPICAL STARBUCKS STORE (WHICH IS SUBJECT TO CHANGE AT ANYTIME) AND DO NOT REFLECT ACTUAL SITE CONDITIONS. NEITHER PARTY SHALL HAVE ANY OBLIGATION NOR LIABILITY TO THE OTHER (EXCEPT STATED ABOVE) UNTIL A WRITTEN AGREEMENT IS FULLY EXECUTED BY BOTH PARTIES.

STARBUCKS TEMPLATE VERSION: i2024.01.01

PABLO GARCIA, AIA, REG. FL NO. AR99297

Gensler

MAIN OFFICE
M. ARTHUR GENSLER JR. & ASSOCIATES
FL QUALIFIERS LIC. NO. AR98486
45 FREMONT ST, SUITE 1500
SAN FRANCISCO, CA 94105 USA
Tel (415) 433.3700
Fax (415) 836.4599

SATELLITE OFFICE
M. ARTHUR GENSLER JR. & ASSOCIATES
545 NW 26TH ST
SUITE 250
MIAMI, FL 33127 USA
Tel (305) 350.7070
Fax (305) 350.7071

PROJECT NAME:
NW 43RD & 53RD

PROJECT ADDRESS:
5480 NW 43RD STREET
GAINESVILLE, FL 32653

STORE #: 10820
PROJECT #: 34769-081
ISSUE DATE: 03-22-2024
DESIGN MANAGER: ROMINA VIGNOLO
PRODUCTION DESIGNER: GENSLER
CHECKED BY: GENSLER

Revision Schedule

Rev	Date	By	Description

SHEET TITLE:
BUILDING DETAILS

SCALE: AS SHOWN

SHEET NUMBER:
A502

DOOR SCHEDULE - "D"

DESIGN ID	MARK	DESCRIPTION	WIDTH	HEIGHT	HARDWARE SET	FURN BY	INST BY	COMMENTS
Exterior								
EXIST	E3	DOOR - SINGLE FLUSH - 36IN	3' - 5 1/2"	7' - 0"	EXIST	SB	GC	EXISTING DOOR TO REMAIN. GC TO VEIFY THEIR CONDITION AND PROPER FUNCTION.
EXIST	E1	DOOR - STOREFRONT METAL FRAME DOUBLE - TYPE A	6' - 0"	7' - 0"	3-B-BRFR	SB	GC	EXISTING DOOR AND HARDWARE TO REMAIN. GC TO VEIFY THEIR CONDITION AND PROPER FUNCTION.
EXIST	E2	DOOR - STOREFRONT METAL FRAME SINGLE - TYPE B	3' - 0"	7' - 0"	EXIST	SB	GC	EXISTING DOOR AND HARDWARE TO REMAIN. GC TO VEIFY THEIR CONDITION AND PROPER FUNCTION.
Interior								
EXIST	E4	DOOR - SINGLE FLUSH - 36IN	3' - 0"	7' - 0"	EXIST	SB	GC	RR DOOR PANEL FINISHED TO REMAIN AS EXISTING. LET'S PAINT THE DOOR FRAME TO MATCH SW0039 VIRTUAL TAUPE
EXIST	E5	DOOR - SINGLE FLUSH - 36IN	3' - 0"	7' - 0"	EXIST	SB	GC	RR DOOR PANEL FINISHED TO REMAIN AS EXISTING. LET'S PAINT THE DOOR FRAME TO MATCH SW0039 VIRTUAL TAUPE
10086	1	DOOR - SINGLE IMPACT DOUBLE ACTING - 36IN 915MM	3' - 0"	7' - 0"	11	SB	GC	ELIASON DOOR PLANEL TO MATCH WILSONART SOLICOLOR KHAKI BROWN. DOOR FRAME TO MATCH SW7037 BALANCED BEIGE

BARRIER FREE DOOR HARDWARE SCHEDULE - "D"

DESIGN ID	COUNT	MARK	DESCRIPTION	FURN BY	INST BY	COMMENTS
23130	1	2	DOOR - BARRIER FREE HARDWARE ACTUATOR BOLLARD	SB	GC	GC TO COORD. INSTALL & CABLING WITH SB VENDOR. GC ORDER FROM LOCKNET-SBUXTEAMLOCKNET.COM
23132	1	3	DOOR - BARRIER FREE HARDWARE ACTUATOR MULLION MOUNT	SB	GC	GC TO COORD. INSTALL & CABLING WITH SB VENDOR. GC ORDER FROM LOCKNET-SBUXTEAMLOCKNET.COM
23135	1	4	DOOR - BARRIER FREE HARDWARE OPERATOR - BLACK	SB	GC	GC TO COORD. INSTALL & CABLING WITH SB VENDOR. GC ORDER FROM LOCKNET-SBUXTEAMLOCKNET.COM

DOOR HARDWARE SET NO. 11 - For workroom door at backbar

No.	Item	Description	Manufacturer	Finish
1	Traffic Door Package	SCP8 36" x 84"	Eliason	As Selected

DOOR HARDWARE SET NO. 3-B-BRFR - For pair aluminum secondary entry/exit doors (50 or more occupancy)

No.	Item	Description	Manufacturer	Finish
2	Hanging Devices	CFM 83 HD (83 = specified door height)	Pemko	630
1	Securing Devices (active leaf)	CD98 NL-OP LBR Panic Device	Von Duprin	628/630
1	Securing Devices (inactive leaf)	CD98 EO LBR Panic Device	Von Duprin	628/630
3	Securing Devices (active leaf)	C607 7-Pin Core Combinated "A" Keyway	Falcon Lock	626
1	Securing Devices (active leaf)	KB609-2 Cut Control Key "A" Keyway	Falcon Lock	---
9	Securing Devices (active leaf)	KB632-2 Cut User Key "A" Keyway	Falcon Lock	---
1	Securing Devices (active leaf)	C953 7-Pin Rim Cylinder Housing	Falcon Lock	626
2	Securing Devices (active leaf)	C987 7-Pin Mortise Cylinder Housing	Falcon Lock	626
2	Securing Devices (active leaf)	A08794-003 Adjustable Ring, Mortise Cyl. 5/16-13/32	Falcon Lock	626
2	Operating Trim	Offset Pull BF157	Rockwood	630
1	Closing Devices	8916 Door Closer 8916 AF89P AL	Dorma	689
2	Stops and Holders	473 Door Stop w/Hook	Rockwood	626
2	Accessories	Door Sweep 18062CNB36	Pemko	A
1	Threshold	325 Half Saddle Thrishold	National Guard	---
1	Accessories	137NA Weather Strip 20' 72" x 84"	National Guard	A
1	Sign	Vinyl Sign: "THIS DOOR MUST REMAIN UNLOCKED WHEN BUILDING IS OCCUPIED"	Seton	---
REFER TO THE BARRIER-FREE EXTERIOR DOOR SCHEDULE ON THIS SHEET THAT WILL INCLUDE ADDITIONAL DOOR CONTENT FOR THIS SET				

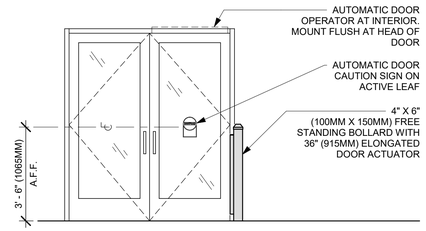

EXTERIOR ELEVATION

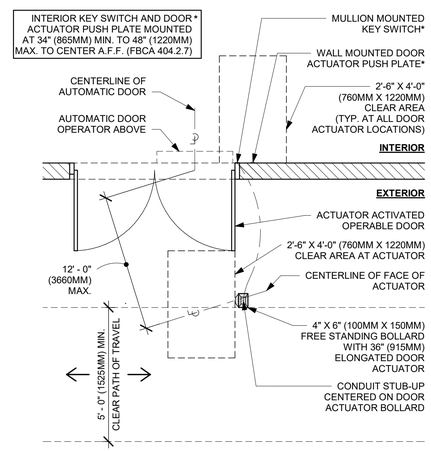

PLAN VIEW

01 ENTRY DOOR ACTUATION - BOLLARD

Scale: 3/8" = 1'-0"

DOOR LEGEND

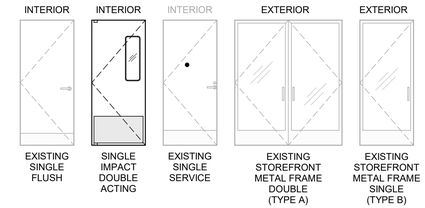

GENERAL NOTES

A. STARBUCKS VENDOR TO PROVIDE DOOR HARDWARE COMPONENTS. GC TO INSTALL.

B. SEE SHEET A101 FOR TAGGED LOCATION OF EXTERIOR DOORS AND WINDOWS.

C. EGRESS SHALL NOT PASS THROUGH KITCHENS, STORAGE ROOMS, CLOSETS OR SIMILAR SPACES. (FBCB 1016.2)

D. PANIC AND FIRE EXIT HARDWARE, WHERE INSTALLED ON DOORS IN THIS BUILDING SHALL SATISFY THE FOLLOWING (FBCB 1010.2.9):

a. THE ACTUATION PORTION OF THE RELEASING DEVICE SHALL EXTEND AT LEAST ONE-HALF OF THE DOOR LEAF WIDTH.

b. THE MAXIMUM UNLATCHING FORCE DOES NOT EXCEED 15 POUNDS (6.8 KG).

c. PIVOTED OR BALANCED DOORS SHALL BE OF THE PUSH-PAD TYPE WHERE PANIC HARDWARE IS REQUIRED AND THE PAD SHALL NOT EXTEND ACROSS MORE THAN ONE-HALF OF THE DOOR WIDTH, MEASURED FROM THE LATCH SIDE.

d. PANIC HARDWARE LISTED IN ACCORDANCE WITH UL 305.

e. FIRE EXIT HARDWARE LISTED IN ACCORDANCE WITH UL 10C AND UL 305.

E. FOR BARRIER FREE DOOR HARDWARE INSTALLATION AND TECHNICAL SUPPORT, CONTACT THE STARBUCKS SUPPLIER, LOCKNET, AT SBUXTEAM@LOCKNET.COM.

G. PROVIDE SAFETY GLASS IN LOCATIONS AS REQUIRED BY FBCB SECTION 2406.

A. ALL DOORS TO HAVE BOTTOM CLEARENCE OF 1/4" BETWEEN THRESHOLD AND DOOR BOTTON. UNO.

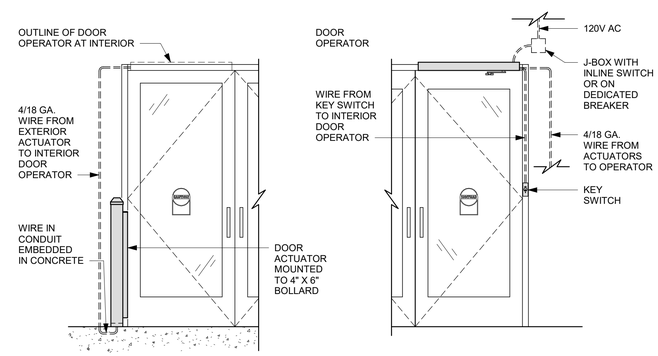

EXTERIOR ELEVATION **INTERIOR ELEVATION**

02 ENTRY/EXIT DOOR ACTUATION - ELECTRICAL WIRING DIAGRAM

Scale: 1/2" = 1'-0"

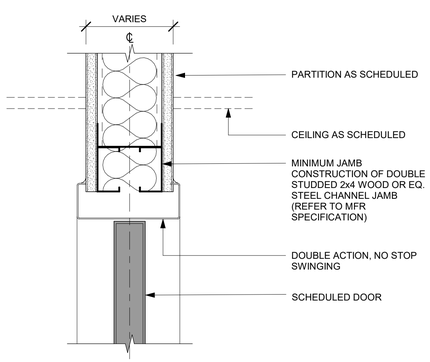

03 DOUBLE ACTION DOOR - FRAME HEAD

Scale: 3" = 1'-0"

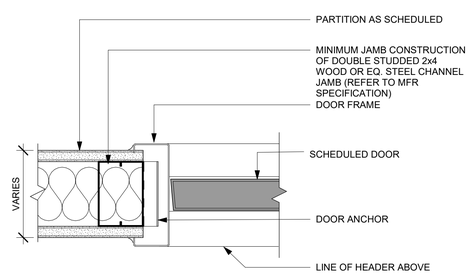

04 DOUBLE ACTION DOOR - FRAME JAMB

Scale: 3" = 1'-0"

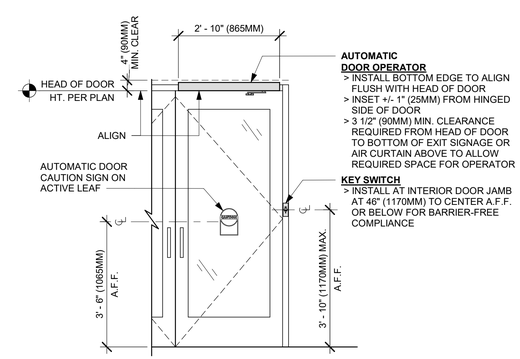

INTERIOR ELEVATION

05 ENTRY/EXIT DOOR ACT. - KEY SWITCH AND OPER.

Scale: 1/2" = 1'-0"

PERMIT SET - FOR CONSTRUCTION USE

© 2022 STARBUCKS COFFEE COMPANY

STARBUCKS®
2401 UTAH AVENUE SOUTH
SEATTLE, WASHINGTON 98134
(206) 318-1575

THESE DRAWINGS AND THE PROJECT MANUAL ARE CONFIDENTIAL AND SHALL REMAIN THE SOLE PROPERTY OF STARBUCKS CORPORATION, WHICH IS THE OWNER OF THE COPYRIGHT IN THIS WORK. THEY SHALL NOT BE REPRODUCED (IN WHOLE OR IN PART), SHARED WITH THIRD PARTIES OR USED IN ANY MANNER ON OTHER PROJECTS OR EXTENSIONS TO THIS PROJECT WITHOUT THE PRIOR WRITTEN CONSENT OF STARBUCKS CORPORATION. THESE DRAWINGS AND SPECIFICATIONS ARE INTENDED TO EXPRESS DESIGN INTENT FOR A PROTOTYPICAL STARBUCKS STORE (WHICH IS SUBJECT TO CHANGE AT ANYTIME) AND DO NOT REFLECT ACTUAL SITE CONDITIONS. NEITHER PARTY SHALL HAVE ANY OBLIGATION NOR LIABILITY TO THE OTHER (EXCEPT STATED ABOVE) UNTIL A WRITTEN AGREEMENT IS FULLY EXECUTED BY BOTH PARTIES.

STARBUCKS TEMPLATE VERSION: i2024.01.01

PABLO GARCIA, AIA, REG. FL NO. AR99297

Gensler

MAIN OFFICE
M. ARTHUR GENSLER JR. & ASSOCIATES
FL QUALIFIERS LIC. NO. AR99486
45 FREMONT ST, SUITE 1500
SAN FRANCISCO, CA 94105 USA
Tel (415) 433.3700
Fax (415) 836.4599

SATELLITE OFFICE
M. ARTHUR GENSLER JR. & ASSOCIATES
545 NW 26TH ST
SUITE 250
MIAMI, FL 33127 USA
Tel (305) 350.7070
Fax (305) 350.7071

PROJECT NAME: NW 43RD & 53RD

PROJECT ADDRESS: 5480 NW 43RD STREET GAINESVILLE, FL 32653

STORE #:	10820
PROJECT #:	34769-081
ISSUE DATE:	03-22-2024
DESIGN MANAGER:	ROMINA VIGNOLO
PRODUCTION DESIGNER:	GENSLER
CHECKED BY:	GENSLER

Revision Schedule

Rev	Date	By	Description

SHEET TITLE:
WINDOW AND DOOR SCHEDULES & DETAILS
SCALE: AS SHOWN

SHEET NUMBER:
A601

FURNITURE SCHEDULE - "F"

DESIGN ID	COUNT	DESCRIPTION	FURN. BY	INST. BY	COMMENTS
BANQUETTE					
22491	2	BANQUETTE - SAN JUAN - 4FT 122CM - WHITE OAK WD0073	SB	GC	
22502	4	BANQUETTE - SAN JUAN - 6FT 183CM - WHITE OAK WD0073	SB	GC	
23016	2	BANQUETTE - SAN JUAN CUSHION SEAT AND BACK C EDGE - 4FT 122CM - CARAMEL BROWN NATURAL F0008	SB	GC	
23017	4	BANQUETTE - SAN JUAN CUSHION SEAT AND BACK C EDGE - 6FT 183CM - CARAMEL BROWN NATURAL F0008	SB	GC	
CHAIR					
21367	6	CHAIR - CAFE PEGGY UPHOLSTERED - WHITE OAK AND CARAMEL BROWN NATURAL WD0073 F0008	SB	GC	
22565	6	CHAIR - LOUNGE DAPHNE - WHITE OAK AND CARAMEL BROWN NATURAL WD0073 F0008	SB	GC	
23447	16	CHAIR - CAFE HANS 2.0 - MOTTLED GREY	SB	GC	
23449	8	CHAIR - LOUNGE HANS 2.0 - MOTTLED GREY	SB	GC	
TK0077	1	CHAIR - MANAGERS WORKSTATION	SB	GC	STEELCASE SERIES ONE ARMLESS
DESK					
TK0053	1	DESK - MANAGERS WORKSTATION SHELVES - 48IN 1220MM	SB	GC	
TK0076	1	DESK - MANAGERS WORKSTATION - 48X24X27IN 1220X610X685MM	SB	GC	
MIRROR					
TK0050	1	MIRROR - BOH - 16X51IN 405X1295MM	SB	GC	
OTHER					
22761	43	ACOUSTICAL CEILING PANEL - SUSPENSION MOUNT - 17X63IN 430X1600MM - BLACK	SB	GC	
TK0051	1	COAT HOOK STRIP - 30IN 760MM	SB	GC	BLACK FINISH
STORAGE					
TK0078	1	FILE MOBILE PEDESTAL WITH CUSHION AND LOCK	SB	GC	
TK0079	1	MANAGERS DESK CART - 24X20IN 610X510MM	SB	GC	
TABLE					
17340	6	TABLE - CAFE METAL PEDESTAL BASE SQUARE - 24IN 610MM - BLACK MT0028	SB	GC	
17341	2	TABLE - ACCESSIBLE METAL WITH TAPERED LEGS - 36X24IN 915X610MM - BLACK MT0028	SB	GC	
18400	1	TABLE - COMMUNITY CAFE HEIGHT ANGLE BASE - 8 SEAT WIDE - WITH POWER WHITE OAK WD0073	SB	GC	
18468	2	TABLE - BASE CAFE T LEG - HOT ROLLED STEEL MT0011	SB	GC	
18680	9	TABLE - BASE CAFE HEIGHT PEDESTAL - FLAT BLACK MT0028	SB	GC	
20127	4	TABLE - OCCASIONAL SIDE CAMERON - FLAT BLACK MT0028			
20128	4	TABLE - OCCASIONAL COFFEE CAMERON - FLAT BLACK MT0028	SB	GC	
21800	1	TABLE - TOP ACCESSIBLE ROUND EDGE OBLONG - 48X24IN 1220X610MM - WHITE OAK WD0073	SB	GC	
21842	9	TABLE - TOP ROUND EDGE ROUND - 24IN 610MM - WHITE OAK WD0073	SB	GC	
TK0028	3	TABLE - OCCASIONAL COFFEE COCO	SB	GC	
WINDOW TREATMENT					
22486	17	ROLLER SHADE - DARK BROWN - 5PC OPEN	SB	GC	

SPECIALTY EQUIPMENT SCHEDULE - "E"

DESIGN ID	COUNT	DESCRIPTION	FURN. BY	INST. BY	COMMENTS
COOLING					
10267	1	FRIDGE UNDERCOUNTER 1 DOOR - 27IN 685MM	SB	GC	
EQUIPMENT					
17564	1	BLENDER PITCHER RINSER WITH SENSOR	SB	GC	
21679	1	NITROGEN GENERATOR ELEMENT COMPACT	SB	GC	
22885	1	BREWER CLOVER VERTICA DOUBLE	SB	GC	
23380	1	BREWER CLOVER VERTICA INSTALL KIT	SB	GC	
23381	1	BREWER CLOVER VERTICA CORD	SB	GC	
23393	3	EQUIPMENT - CBE MILK DISPENSE BRACKET SLIDE	SB	GC	
23419	3	MILK DISPENSER	SB	GC	
23443	1	OVEN COMBI	SB	GC	
FAN					
X1000	1	FAN - OVEN HOOD CONVOTHERM COMBI	SB	GC	
FOOD CASE					
21215	1	FOOD CASE - ZEPHYR - 28IN 710MM	SB	GC	
23440	1	FOOD CASE - WARMING WALL - 1000 SQUARE	SB	GC	
ICE					
18029	1	ICE - BIN B110	SB	GC	BPF-1 ADAPTER KIT (011076103) REQUIRED WHEN PAIRING WITH 30" (760MM) ICE MACHINES
19278	2	ICE - BIN DROP IN 45LB 20KG HORIZONTAL	SB	GC	
23181	1	ICE - MACHINE HMD2110RBT REMOTE COOLED	SB	GC	
23421	1	ICE - NUGGET ICE DISPENSER - SINGLE ICE MACHINE	SB	GC	
23423	1	ICE - NUGGET ICE DIVERTER	SB	GC	
23424	1	ICE - NUGGET ICE DIVERTER CONTROL PANEL	SB	GC	
23526	1	ICE - BIN ADAPTOR FOLLETT B110H22H30DV PEDESTAL FOR B110	SB	GC	GC TO COORD. W/ SB VENDOR
OTHER					
10091	1	CUP DISPENSER TALL HOT VERTICAL	SB	GC	
10396	1	CUP DISPENSER SHORT HOT VERTICAL	SB	GC	
10791	2	CUP DISPENSER GRANDE VENTI COLD VERTICAL	SB	GC	
10855	2	CUP DISPENSER GRANDE VENTI HOT VERTICAL	SB	GC	
10858	1	CUP DISPENSER TALL COLD VERTICAL	SB	GC	
10992	2	PAPER TOWEL DISPENSER HALF SIZE - TRANSLUCENT GRAY	SB	GC	
11115	2	SOAP DISPENSER SINK MOUNTED	SB	GC	
13330	1	MOBILE CUP DISPENSER CADDY	SB	GC	
13584	1	CUP DISPENSER TRENTA COLD VERTICAL	SB	GC	
21554	10	POWER EXTENSION DUAL RECEPTACLE AND USB SURFACE MOUNT - BLACK	SB	GC	
22627	1	NITRO 2 TAP HANDLE WITH BADGE AND MOUNT KIT	SB	GC	JOE TAP, FOR USE AT BACKBAR NITRO FONT
23420	2	REFRESHER DISPENSE SMALL	SB	GC	
STORAGE					
17264	1	ROLLING PASTRY TRAY THAW RACK - 20X26IN 510X660MM	SB	GC	
21934	1	PASTRY TRAY RACK UNDERCOUNTER - 30IN 760MM	SB	GC	
23445	3	PASTRY COOLING RACK WALL MOUNTED	SB	GC	
TK0048	2	5 COMP LOCKER - 15IN 380MM	SB	GC	

KEYED NOTES

01 INSTALL EXTERIOR FURNITURE THROUGHOUT AS SHOWN. REFER TO FURNITURE SCHEDULE FOR ADDITIONAL INFORMATION.
02 INSTALL INTERIOR CAFE FURNITURE THROUGHOUT AS SHOWN. REFER TO FURNITURE SCHEDULE FOR ADDITIONAL INFORMATION.
03 COMMUNITY BOARD. SEE INTERIOR FINISH ELEVATIONS.
04 CONDIMENT CART. SEE INTERIOR FINISH ELEVATIONS.
05 DO NOT CAULK TRASH RINGS TO COUNTERTOP.
06 MERCHANDISE DISPLAY. SEE DETAILS I509 FOR MORE INFORMATION.
07 DO NOT BLOCK FOOD CASE INTAKE/EXHAUST.
08 SAFE LOCATED AT POS CABINET. SEE ELECTRICAL FOR ADDITIONAL INFORMATION.

GENERAL NOTES

A. GENERAL CONTRACTOR TO SCHEDULE WITH LOCAL REFRIGERATION CONTRACTOR TO CONDUCT INITIAL FOOD CASE START-UP AND TESTING. FOR LIST OF APPROVED START UP CONTRACTORS, CONTACT PROJECT CONSTRUCTION REPRESENTATIVE.
B. THE SITE IS SERVED BY THE MUNICIPAL WATER AND SEWER SYSTEM UNLESS OTHERWISE NOTED.
C. ALL FOOD STORAGE SHALL BE 6" (150mm) A.F.F.
D. ALL WOOD SURFACES (DOORS, TRIM, SHELVES, CABINETS) SHALL BE SEALED.
E. ALL EQUIPMENT AND INSTALLATION WILL MEET NATIONAL SANITATION FOUNDATION STANDARDS OR EQUIVALENT.
F. ALL EQUIPMENT AND CABINETRY WILL BE FLUSH MOUNTED TO COUNTERS, WALLS OR FLOORS, OR BE RAISED TO ALLOW FOR CLEANING.
G. CONFIRM ALL NECESSARY EQUIPMENT CLEARANCES PER PRODUCT CUT SHEET (E.G. ICE MACHINE).
H. FOR LOCATION OF COUNTERTOP EQUIPMENT, REFER TO CASEWORK ELECTRICAL DETAILS.
I. EQUIPMENT UNITS SHALL CONTAIN NO EXPOSED THREADS, EMBELLISHMENTS OR OVERHANGING EDGES THAT SERVE AS PLACES FOR ACCUMULATION OF DUST, DIRT AND DEBRIS.
J. WARMING OVEN(S) SHOWN FOR PERMITTING PURPOSES. INSTALLATION AT STORE OPENING TO BE VERIFIED BY STARBUCKS CONSTRUCTION REPRESENTATIVE.
K. EACH HAND WASHING SINK WILL HAVE A SINGLE SERVICE TOWEL AND SOAP DISPENSER, AND ALL HAND SINKS TO HAVE A COMBINATION FAUCET OR PREMIXING FAUCET.
L. FOR PLUMBING FIXTURES, REFER TO THE PLUMBING DESIGN PLAN. FOR DATA DEVICE SCHEDULE, REFER TO THE ELECTRICAL DESIGN PLAN.
M. SEE ELEVATIONS FOR DISTRIBUTION OF CUP DISPENSERS.
N. PROVIDE FIRE EXTINGUISHERS AS NOTED ON THE APPROVED PLANS FROM THE LOCAL JURISDICTION.

NOTE :
REFER SHEET I601 & I602 FOR DATA DEVICE, FURNITURE, GRAPHICS, PLUMBING FIXTURE, SPECIALTY EQUIPMENT, AND MECHANICAL EQUIPMENT SCHEDULE.

LEGEND

- ITEM/EQUIPMENT FOR FUTURE
- EXISTING ITEM/EQUIPMENT TO BE REUSED
- EXISTING ITEM/EQUIPMENT TO REMAIN
- ADJACENT TENANT

NOTE: LEGEND IS DEPENDENT ON COLORS USED FOR COMPLETE SCOPE INFORMATION.

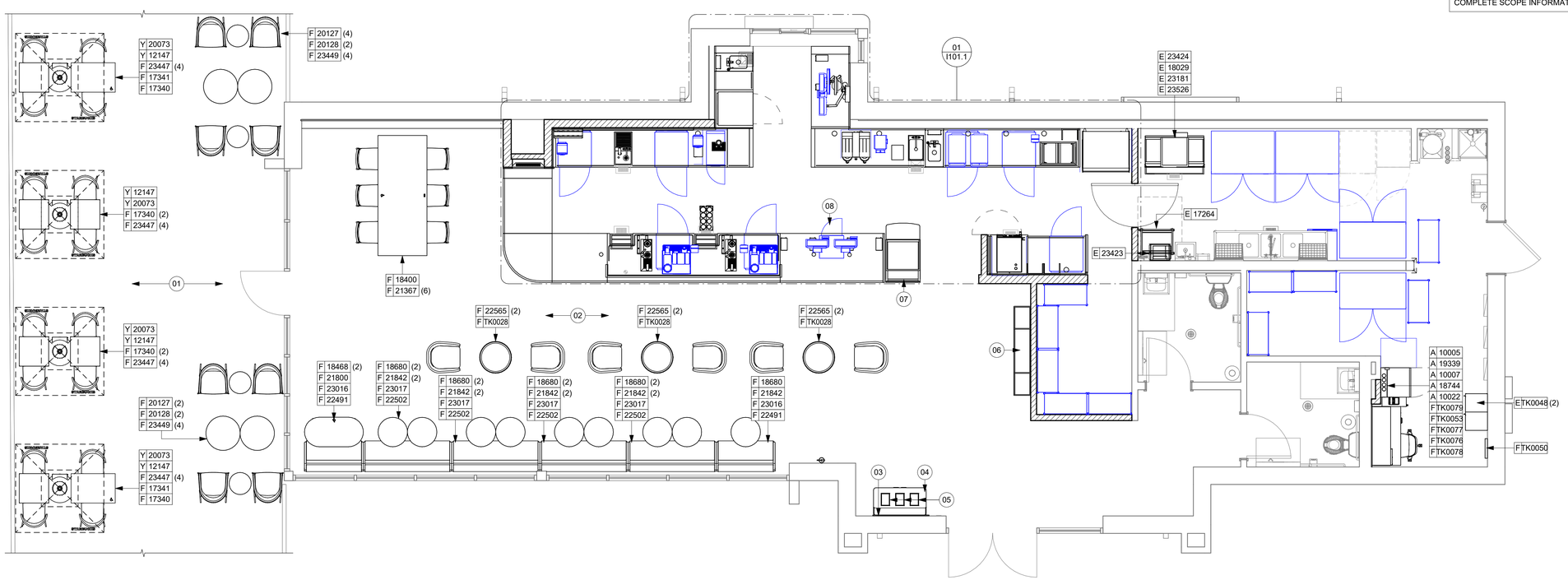

01 FURNITURE, FIXTURES AND EQUIPMENT PLAN
Scale: 1/4" = 1'-0"

PERMIT SET - FOR CONSTRUCTION USE

© 2022 STARBUCKS COFFEE COMPANY

STARBUCKS®
2401 UTAH AVENUE SOUTH
SEATTLE, WASHINGTON 98134
(206) 318-1575

THESE DRAWINGS AND THE PROJECT MANUAL ARE CONFIDENTIAL AND SHALL REMAIN THE SOLE PROPERTY OF STARBUCKS CORPORATION, WHICH IS THE OWNER OF THE COPYRIGHT IN THIS WORK. THEY SHALL NOT BE REPRODUCED (IN WHOLE OR IN PART), SHARED WITH THIRD PARTIES OR USED IN ANY MANNER ON OTHER PROJECTS OR EXTENSIONS TO THIS PROJECT WITHOUT THE PRIOR WRITTEN CONSENT OF STARBUCKS CORPORATION. THESE DRAWINGS AND SPECIFICATIONS ARE INTENDED TO EXPRESS DESIGN INTENT FOR A PROTOTYPICAL STARBUCKS STORE (WHICH IS SUBJECT TO CHANGE AT ANYTIME) AND DO NOT REFLECT ACTUAL SITE CONDITIONS. NEITHER PARTY SHALL HAVE ANY OBLIGATION NOR LIABILITY TO THE OTHER (EXCEPT STATED ABOVE) UNTIL A WRITTEN AGREEMENT IS FULLY EXECUTED BY BOTH PARTIES.

STARBUCKS TEMPLATE VERSION: i2024.01.01

PABLO GARCIA, AIA, REG. FL NO. AR99297

Gensler
MAIN OFFICE
M. ARTHUR GENSLER JR. & ASSOCIATES
FL QUALIFIER'S LIC. NO. AR96486
45 FREMONT ST., SUITE 1500
SAN FRANCISCO, CA 94105 USA
Tel (415) 433.3700
Fax (415) 836.4599

SATELLITE OFFICE
M. ARTHUR GENSLER JR. & ASSOCIATES
545 NW 26TH ST
SUITE 250
MIAMI, FL 33127 USA
Tel (305) 350.7070
Fax (305) 350.7071

PROJECT NAME:
NW 43RD & 53RD

PROJECT ADDRESS:
5480 NW 43RD STREET
GAINESVILLE, FL 32653

STORE #:	10820
PROJECT #:	34769-081
ISSUE DATE:	03-22-2024
DESIGN MANAGER:	ROMINA VIGNOLO
PRODUCTION DESIGNER:	GENSLER
CHECKED BY:	GENSLER

Revision Schedule

Rev	Date	By	Description

SHEET TITLE:
FF & E PLAN

SCALE: AS SHOWN

SHEET NUMBER:
I101

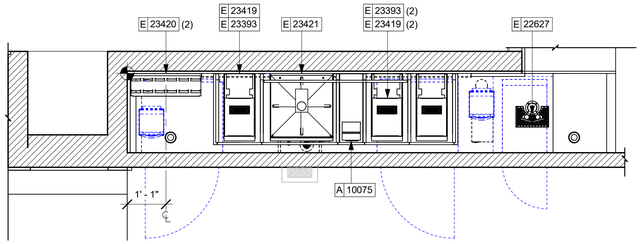

02 FURNITURE, FIXTURES AND EQUIPMENT ENLARGED PLAN

Scale: 1/2" = 1'-0"

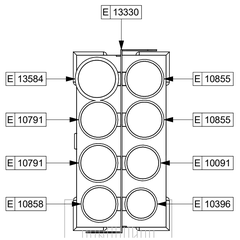

03 ENLARGED CUP CADDY

Scale: 1 1/2" = 1'-0"

PLUMBING FIXTURE SCHEDULE - "P"					
DESIGN ID	COUNT	DESCRIPTION	FURN. BY	INST. BY	COMMENTS
DRAIN					
10294	6	DRAIN - FLOOR SINK SQUARE - 12IN 305MM	SB	GC	
10726	6	DRAIN - GRATE HALF SQUARE - 12IN 305MM	SB	GC	
FAUCET					
10152	1	FAUCET - DOUBLE LABORATORY WITH BENT RISER SPOUT	SB	GC	
10153	3	FAUCET - WATER TOWER - 12IN 305MM	SB	GC	
10215	1	FAUCET - DOUBLE LABORATORY WITH SWING SPOUT	SB	GC	
10597	2	FAUCET - SINGLE HANDLE	SB	GC	
11003	2	FAUCET - METERED	SB	GC	
22642	2	FAUCET - INSTANTHOT SYSTEM 2 BUTTON WITH BOILER AND BRACKET	SB	GC	KIT INCLUDES FONT, UNDERCOUNTER BOILER AND BOILER BRACKET FOR SIDE PANEL MOUNTING. BRACKET CAN BE FLOOR MOUNTED USING SET OF (4) STAINLESS STEEL LEGS, ORDERED SEPARATELY THROUGH VENDOR.
SINK					
10549	1	SINK - RINSE DROP IN SST - 12X20IN 305X510MM	SB	GC	
17565	1	SINK - RINSE WITH DRAINBOARD - 15X27IN 380X685MM	SB	GC	
22768	2	SINK - COUNTERTOP RINSER WITH WATER TOWER - 26X9IN 660X235MM	SB	GC	

KEYED NOTES

01 GENERAL CONTRACTOR TO REVERSE DOOR HINGE ON UNDER COUNTER REFRIGERATOR TO LEFT HAND SWING, AS SHOWN.
02 DO NOT BLOCK FOOD CASE INTAKE/EXHAUST.
03 SAFE LOCATED AT POS CABINET. SEE ELECTRICAL SHEETS FOR ADDITIONAL INFORMATION.
04 HAND SINK W/INTEGRAL SPLASH GUARD.
05 INSTALL NITRO EQUIPMENT AS INDICATED.

GENERAL NOTES

A. GENERAL CONTRACTOR TO SCHEDULE WITH LOCAL REFRIGERATION CONTRACTOR TO CONDUCT INITIAL FOOD CASE START-UP AND TESTING. FOR LIST OF APPROVED START UP CONTRACTORS, CONTACT PROJECT CONSTRUCTION REPRESENTATIVE.

B. THE SITE IS SERVED BY THE MUNICIPAL WATER AND SEWER SYSTEM UNLESS OTHERWISE NOTED.

C. ALL FOOD STORAGE SHALL BE 6" (150mm) A.F.F.

D. ALL WOOD SURFACES (DOORS, TRIM, SHELVES, CABINETS) SHALL BE SEALED.

E. ALL EQUIPMENT AND INSTALLATION WILL MEET NATIONAL SANITATION FOUNDATION STANDARDS OR EQUIVALENT.

F. ALL EQUIPMENT AND CABINETRY WILL BE FLUSH MOUNTED TO COUNTERS, WALLS OR FLOORS, OR BE RAISED TO ALLOW FOR CLEANING.

G. CONFIRM ALL NECESSARY EQUIPMENT CLEARANCES PER PRODUCT CUT SHEET (E.G. ICE MACHINE).

H. FOR LOCATION OF COUNTERTOP EQUIPMENT, REFER TO CASEWORK ELECTRICAL DETAILS.

I. EQUIPMENT UNITS SHALL CONTAIN NO EXPOSED THREADS, EMBELLISHMENTS OR OVERHANGING EDGES THAT SERVE AS PLACES FOR ACCUMULATION OF DUST, DIRT AND DEBRIS.

J. WARMING OVEN(S) SHOWN FOR PERMITTING PURPOSES. INSTALLATION AT STORE OPENING TO BE VERIFIED BY STARBUCKS CONSTRUCTION REPRESENTATIVE.

K. EACH HAND WASHING SINK WILL HAVE A SINGLE SERVICE TOWEL AND SOAP DISPENSER, AND ALL HAND SINKS TO HAVE A COMBINATION FAUCET OR PREMIXING FAUCET.

L. FOR PLUMBING FIXTURES, REFER TO THE PLUMBING DESIGN PLAN. FOR DATA DEVICE SCHEDULE, REFER TO THE ELECTRICAL DESIGN PLAN.

M. SEE ELEVATIONS FOR DISTRIBUTION OF CUP DISPENSERS.

N. PROVIDE FIRE EXTINGUISHERS AS NOTED ON THE APPROVED PLANS FROM THE LOCAL JURISDICTION.

NOTE :
REFER SHEET I601 & I602 FOR DATA DEVICE, FURNITURE, GRAPHICS, PLUMBING FIXTURE, SPECIALTY EQUIPMENT, AND MECHANICAL EQUIPMENT SCHEDULE.

LEGEND

- ITEM/EQUIPMENT FOR FUTURE
- EXISTING ITEM/EQUIPMENT TO BE REUSED
- EXISTING ITEM/EQUIPMENT TO REMAIN
- ADJACENT TENANT

NOTE: LEGEND IS DEPENDENT ON COLORS USED FOR COMPLETE SCOPE INFORMATION.

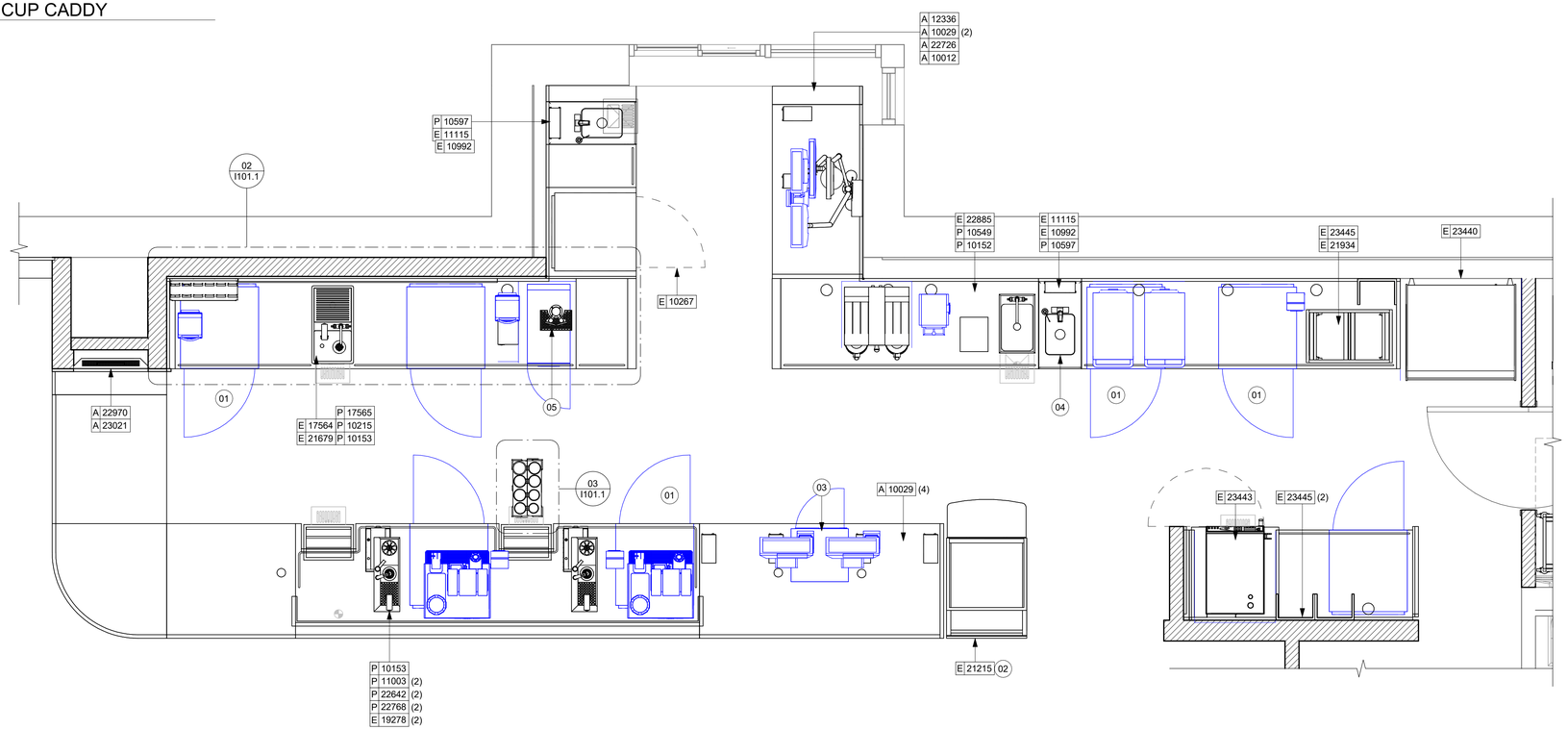

01 FURNITURE, FIXTURES AND EQUIPMENT ENLARGED PLAN

Scale: 1/2" = 1'-0"

N

PERMIT SET - FOR CONSTRUCTION USE

© 2022 STARBUCKS COFFEE COMPANY

STARBUCKS®
2401 UTAH AVENUE SOUTH
SEATTLE, WASHINGTON 98134
(206) 318-1575

THESE DRAWINGS AND THE PROJECT MANUAL ARE CONFIDENTIAL AND SHALL REMAIN THE SOLE PROPERTY OF STARBUCKS CORPORATION, WHICH IS THE OWNER OF THE COPYRIGHT IN THIS WORK. THEY SHALL NOT BE REPRODUCED (IN WHOLE OR IN PART), SHARED WITH THIRD PARTIES OR USED IN ANY MANNER ON OTHER PROJECTS OR EXTENSIONS TO THIS PROJECT WITHOUT THE PRIOR WRITTEN CONSENT OF STARBUCKS CORPORATION. THESE DRAWINGS AND SPECIFICATIONS ARE INTENDED TO EXPRESS DESIGN INTENT FOR A PROTOTYPICAL STARBUCKS STORE (WHICH IS SUBJECT TO CHANGE AT ANYTIME) AND DO NOT REFLECT ACTUAL SITE CONDITIONS. NEITHER PARTY SHALL HAVE ANY OBLIGATION NOR LIABILITY TO THE OTHER (EXCEPT STATED ABOVE) UNTIL A WRITTEN AGREEMENT IS FULLY EXECUTED BY BOTH PARTIES.

STARBUCKS TEMPLATE VERSION: i2024.01.01

PABLO GARCIA, AIA, REG. FL NO. AR99297

Gensler

MAIN OFFICE
M. ARTHUR GENSLER JR. & ASSOCIATES
FL QUALIFIERS LIC. NO. AR99486
45 FREMONT ST, SUITE 1500
SAN FRANCISCO, CA 94105 USA
Tel (415) 433.3700
Fax (415) 836.4599

SATELLITE OFFICE
M. ARTHUR GENSLER JR. & ASSOCIATES
545 NW 26TH ST
SUITE 250
MIAMI, FL 33127 USA
Tel (305) 350.7070
Fax (305) 350.7071

PROJECT NAME:
NW 43RD & 53RD

PROJECT ADDRESS:
5480 NW 43RD STREET
GAINESVILLE, FL 32653

STORE #:	10820
PROJECT #:	34769-081
ISSUE DATE:	03-22-2024
DESIGN MANAGER:	ROMINA VIGNOLO
PRODUCTION DESIGNER:	GENSLER
CHECKED BY:	GENSLER

Revision Schedule

Rev	Date	By	Description

SHEET TITLE:
ENLARGED FF & E

SCALE: AS SHOWN

SHEET NUMBER:
I101.1

CASEWORK FINISH SCHEDULE			
ENGINE ZONE	MATERIAL DESCRIPTION	FINISH CODE	COMMENTS
COMPOSITE - MATTE BLACK MOTTLED PAPER			
CABINETS - EXTERIOR	COMPOSITE - MATTE BLACK MOTTLED PAPER	CP0024	
CABINETS - INTERIOR	COMPOSITE - MATTE BLACK MOTTLED PAPER	CP0024	
CABINETS - UPPER	COMPOSITE - MATTE BLACK MOTTLED PAPER	CP0024	
FRAMING AND HARDWARE	COMPOSITE - MATTE BLACK MOTTLED PAPER	CP0024	
COMPOSITE - WEATHERED CONCRETE			
COUNTERTOPS - BACKBAR	COMPOSITE - WEATHERED CONCRETE	CP0056	
COUNTERTOPS - ESPRESSO	COMPOSITE - WEATHERED CONCRETE	CP0056	
COUNTERTOPS - ESPRESSO SHROUD	COMPOSITE - WEATHERED CONCRETE	CP0056	
COUNTERTOPS - FRONTBAR	COMPOSITE - WEATHERED CONCRETE	CP0056	
CUSTOM PLAM - WILSONART - KHAKI BROWN D50-60 - MATTE FINISH			
CABINETS - DT POS CUBBY	CUSTOM PLAM - WILSONART - KHAKI BROWN D50-60 - MATTE FINISH	X0303	
CABINETS - EXTERIOR	CUSTOM PLAM - WILSONART - KHAKI BROWN D50-60 - MATTE FINISH	X0303	
CABINETS - UPPER	CUSTOM PLAM - WILSONART - KHAKI BROWN D50-60 - MATTE FINISH	X0303	

CASEWORK FINISH SCHEDULE			
ENGINE ZONE	MATERIAL DESCRIPTION	FINISH CODE	COMMENTS
GWB CEILING WITH LEVEL 4 FINISH - PAINT AS SCHEDULED			
CABINETS - UPPER	GWB CEILING WITH LEVEL 4 FINISH - PAINT AS SCHEDULED	X0300	
METAL - FLAT BLACK POWDERCOAT			
FRAMING AND HARDWARE	METAL - FLAT BLACK POWDERCOAT	MT0028	
METAL - STAINLESS STEEL - BRUSHED			
CABINETS - UNDERCOUNTER ICE BIN	METAL - STAINLESS STEEL - BRUSHED	#4 BRUSHED 16GA	
COUNTERTOPS - HAND SINK	METAL - STAINLESS STEEL - BRUSHED	#4 BRUSHED 16GA	
FRAMING AND HARDWARE	METAL - STAINLESS STEEL - BRUSHED	#4 BRUSHED 16GA	
PLASTIC - BLACK HDPE			
CABINETS - INTERIOR	PLASTIC - BLACK HDPE	PL0044	
WOOD - WHITE OAK - ROUNDED SLAT - VERTICAL			
FINISH PANELS	WOOD - WHITE OAK - ROUNDED SLAT - VERTICAL	WD0073 MAD200-V	
FINISH PANELS - FRONTBAR	WOOD - WHITE OAK - ROUNDED SLAT - VERTICAL	WD0073 MAD200-V	

KEYED NOTES

01 DO NOT CAULK TRASH RINGS TO COUNTERTOPS.
02 INSTALL CONDIMENT CART AS INDICATED.
03 WALL FINISH BEHIND EXPOSED CABINETRY AND BELOW UNDERSIDE OF COUNTERTOP SUBSTRATE TO BE WHITE FRP, EXCEPT AT WARMING WALL.
04 VARIABLE WIDTH FILLER CABINET / COUNTERTOP REQUIRED TO FILL GAP (FIELD VERIFY DIMENSION). FILLER PANEL AND COUNTERTOP SHALL BE SCRIBED AND FIELD CUT TO FIT.
05 FLOOR DRAIN BELOW. CASEWORK MANUFACTURER TO COORDINATE DESIGN TO ENSURE THIS AREA IS READILY ACCESSIBLE FOR CLEANING AND FREE OF COUNTERTOP SUPPORT.
06 INSTALL MERCH UNIT AS INDICATED.
07 INSTALL METAL TRIM TRANSITION WHERE INDICATED.
08 OUTLINE OF HEADER ABOVE FOR REFERENCE.
09 BANQUETTE OUTLINE FOR REFERENCE.

GENERAL NOTES

A. GENERAL CONTRACTOR TO NOTIFY CONSTRUCTION MANAGER IMMEDIATELY IF A DISCREPANCY EXISTS BETWEEN CASEWORK SHOP DRAWINGS, EXISTING SITE CONDITIONS, ARCHITECTURAL DRAWINGS OR BUILT FIXTURES. ALL DIMENSIONS SHALL BE FIELD VERIFIED BY G.C.

B. STARBUCKS CONSTRUCTION MANAGER TO COORDINATE AND SCHEDULE CASEWORK DELIVERY DATE. GENERAL CONTRACTOR TO CONFIRM CASEWORK DELIVERY DATE WITH CASEWORK MANUFACTURER AT FOUR (4) WEEKS PRIOR AND THEN ONE (1) WEEK PRIOR TO SCHEDULED DATE OF DELIVERY.

C. STARBUCKS CONTRACTS DIRECTLY WITH CASEWORK VENDOR TO SUPPLY CASEWORK LISTED IN THE CASEWORK SCHEDULE, UNLESS OTHERWISE NOTED.

D. CASEWORK VENDOR TO PROVIDE COMPLETE SHOP DRAWINGS AND INSTALLATION PACKAGE TO GENERAL CONTRACTOR TO FACILITATE PROPER INSTALLATION.

E. ALL CASEWORK BOX BASES SHALL BE SET AND LEVELED USING 1/4" (6 MM) NON-ABSORBENT PLASTIC SHIMS PROVIDED BY CASEWORK VENDOR.

F. SEE INTERIOR FINISH ELEVATIONS AND SCHEDULES FOR LOCATION AND TAGGING OF WALL TREATMENTS BY CV AND OTHERS.

G. SEE REFLECTED CEILING PLAN FOR ABOVE BAR SOFFIT LOCATIONS.

H. REFERENCE PLUMBING AND ELECTRICAL PLANS FOR PLACEMENT OF ELECTRICAL, DATA AND PLUMBING ON FRONT AND BACKLINE OF BAR.

LEGEND

INDICATES STAINLESS STEEL (SST) COUNTERTOP
INDICATES SOLID SURFACE (SS) COUNTERTOP
DATUM POINT

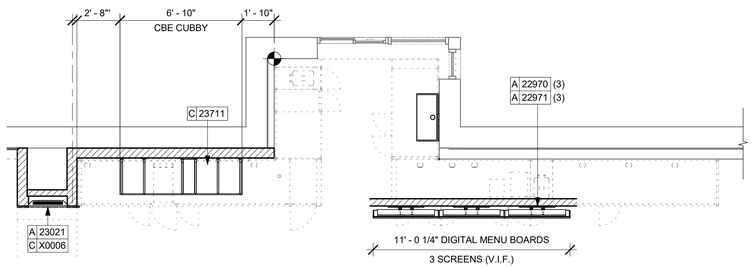

02 UPPER CASEWORK PLAN
Scale: 1/4" = 1'-0"

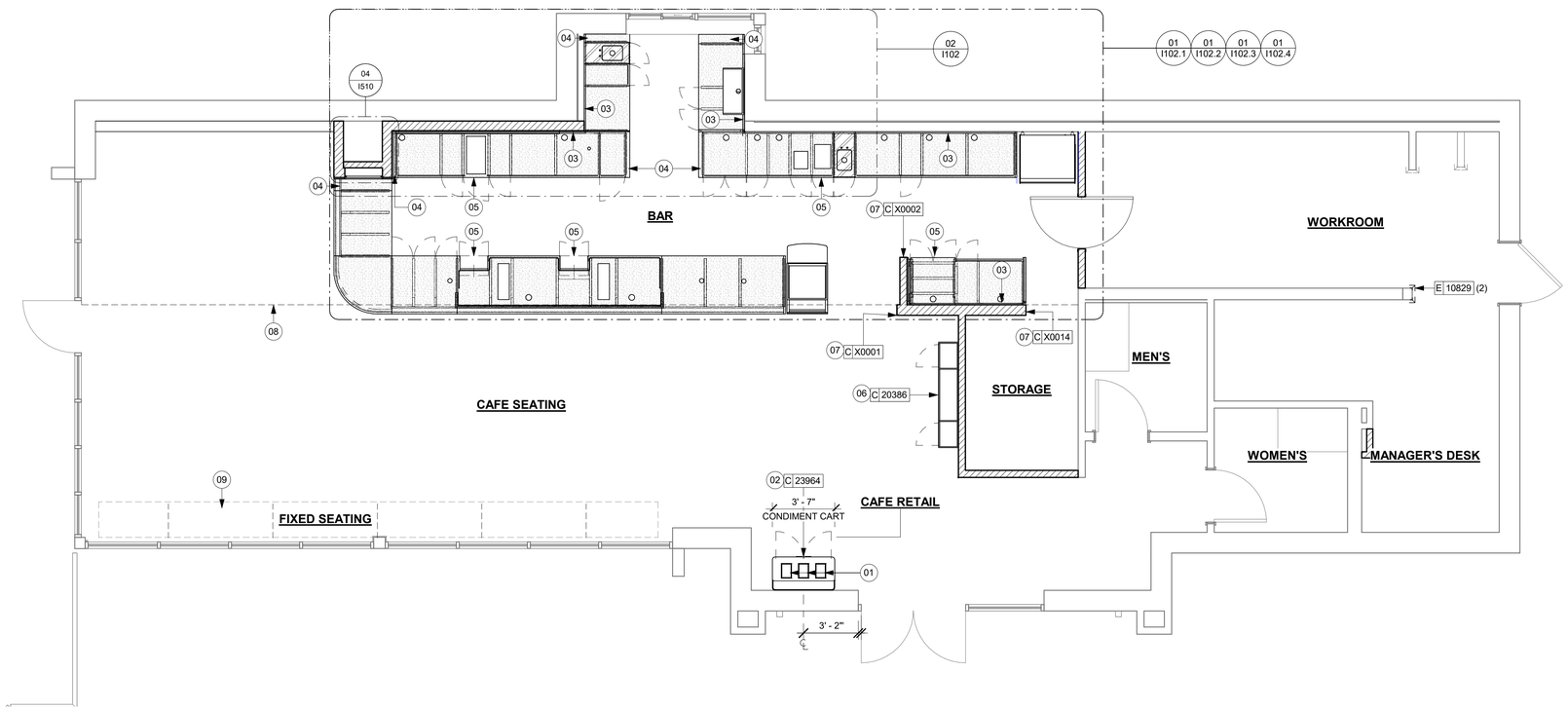

01 CASEWORK PLAN
Scale: 1/4" = 1'-0"

PERMIT SET - FOR CONSTRUCTION USE

© 2022 STARBUCKS COFFEE COMPANY

STARBUCKS®
2401 UTAH AVENUE SOUTH
SEATTLE, WASHINGTON 98134
(206) 318-1575

THESE DRAWINGS AND THE PROJECT MANUAL ARE CONFIDENTIAL AND SHALL REMAIN THE SOLE PROPERTY OF STARBUCKS CORPORATION, WHICH IS THE OWNER OF THE COPYRIGHT IN THIS WORK. THEY SHALL NOT BE REPRODUCED (IN WHOLE OR IN PART), SHARED WITH THIRD PARTIES OR USED IN ANY MANNER ON OTHER PROJECTS OR EXTENSIONS TO THIS PROJECT WITHOUT THE PRIOR WRITTEN CONSENT OF STARBUCKS CORPORATION. THESE DRAWINGS AND SPECIFICATIONS ARE INTENDED TO EXPRESS DESIGN INTENT FOR A PROTOTYPICAL STARBUCKS STORE (WHICH IS SUBJECT TO CHANGE AT ANYTIME) AND DO NOT REFLECT ACTUAL SITE CONDITIONS. NEITHER PARTY SHALL HAVE ANY OBLIGATION NOR LIABILITY TO THE OTHER (EXCEPT STATED ABOVE) UNTIL A WRITTEN AGREEMENT IS FULLY EXECUTED BY BOTH PARTIES.

STARBUCKS TEMPLATE VERSION: i2024.01.01

PABLO GARCIA, AIA, REG. FL NO. AR99297

Gensler
MAIN OFFICE
M. ARTHUR GENSLER JR. & ASSOCIATES
FL QUALIFIER'S LIC. NO. AR96486
45 FREMONT ST, SUITE 1500
SAN FRANCISCO, CA 94105 USA
Tel (415) 433.3700
Fax (415) 836.4599
SATELLITE OFFICE
M. ARTHUR GENSLER JR. & ASSOCIATES
545 NW 26TH ST
SUITE 250
MIAMI, FL 33127 USA
Tel (305) 350.7070
Fax (305) 350.7071

PROJECT NAME: NW 43RD & 53RD

PROJECT ADDRESS: 5480 NW 43RD STREET GAINESVILLE, FL 32653

STORE #:	10820
PROJECT #:	34769-081
ISSUE DATE:	03-22-2024
DESIGN MANAGER:	ROMINA VIGNOLO
PRODUCTION DESIGNER:	GENSLER
CHECKED BY:	GENSLER

Revision Schedule

Rev	Date	By	Description

SHEET TITLE:
CASEWORK PLAN

SCALE: AS SHOWN

SHEET NUMBER:
I102

ADAPTABLE CASEWORK SUPPORT LEG AND DIEWALL BASE SCHEDULE "C"

DESIGN ID	COUNT	DESCRIPTION	FURN. BY	INST. BY	COMMENTS
DIEWALL					
21886	6	DIEWALL - BASE - VARIABLE LENGTH	SB	GC	
21888	48	DIEWALL - SUPPORT LEG	SB	GC	
22408	1	DIEWALL - CORNER ROUNDED	SB	GC	
23439	1	DIEWALL - WRM STRUCTURE LOWERED COUNTER	SB	GC	

ADAPTABLE CASEWORK BOX BASE SCHEDULE - "C"

DESIGN ID	COUNT	DESCRIPTION	FURN. BY	INST. BY	COMMENTS
CABINET					
21889	5	CABINET - BOX BASE - VARIABLE LENGTH	SB	GC	

KEYED NOTES

01 CASEWORK FRAMEWORK ABOVE.
02 FOOD CASE BASE.
03 CASEWORK SUPPORT ADJACENT TO WALL TO SIT ON STEEL ANGLE FASTENED TO WALL.
04 FOOD CASE WARMING WALL STATION.
05 WARMING STRUCTURE.

GENERAL NOTES

A. SEE SHEET I102 FOR COMPLETE CASEWORK SCHEDULE.
B. METAL COMPONENTS PROVIDED BY CASEWORK SUPPLIER UNLESS OTHERWISE NOTED.
C. DIEWALL AND BOX BASES TO BE INSTALLED PRIOR TO FLOORING MATERIAL INSTALLATION.
D. G.C. TO INSTALL BLOCKING BETWEEN DIEWALL BASE.
E. ALL DIMENSIONS TAKEN FROM FRONTLINE DATUM POINT TO OUTSIDE CORNER OF DIEWALL BASE.
F. BOX BASE (IF APPLICABLE) BUTTS UP AGAINST INSIDE FACE OF DIEWALL. PROVIDE SEALANT AT SEAM.
G. LEVEL BOX BASES TO BOTTOM RAIL OF WALL FRAME.

LEGEND

VARIABLE LENGTH BOX BASE
CABINET LEG
DATUM POINT

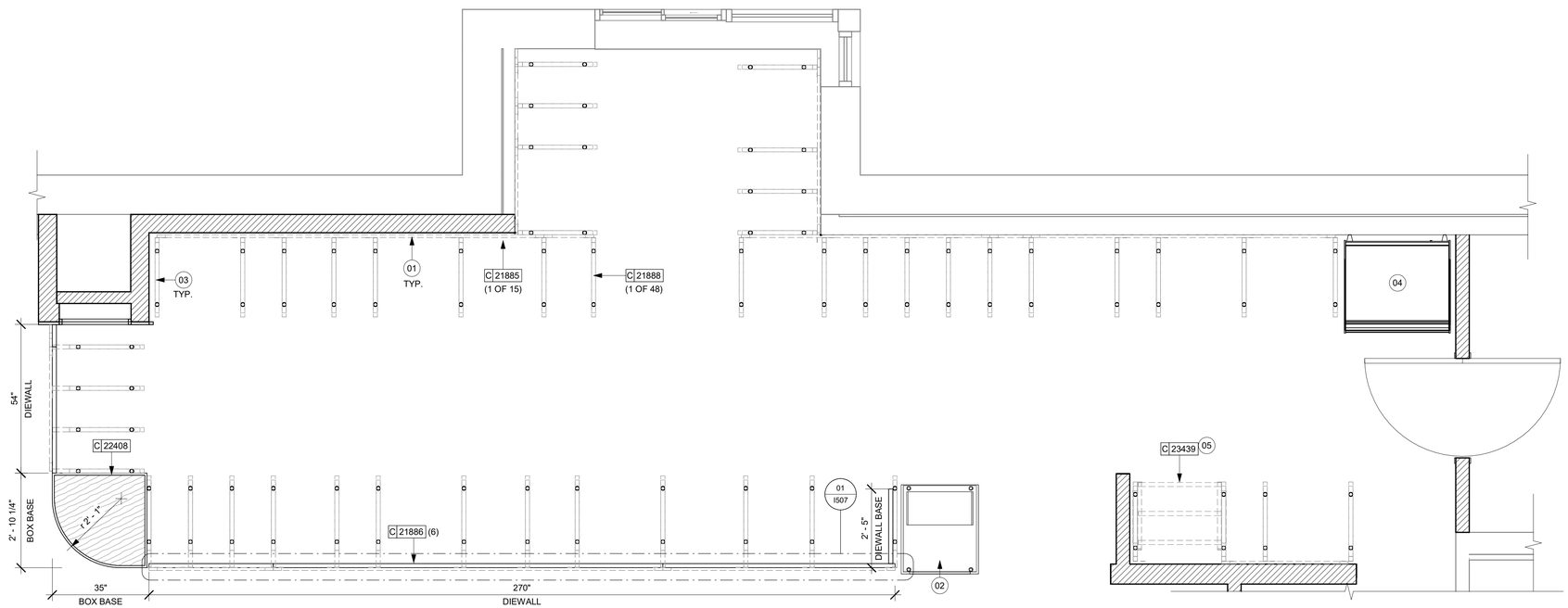

01 ADAPTABLE CASEWORK BASE PLAN
Scale: 1/2" = 1'-0"

N

PERMIT SET - FOR CONSTRUCTION USE

© 2022 STARBUCKS COFFEE COMPANY

STARBUCKS®
2401 UTAH AVENUE SOUTH
SEATTLE, WASHINGTON 98134
(206) 318-1575

THESE DRAWINGS AND THE PROJECT MANUAL ARE CONFIDENTIAL AND SHALL REMAIN THE SOLE PROPERTY OF STARBUCKS CORPORATION, WHICH IS THE OWNER OF THE COPYRIGHT IN THIS WORK. THEY SHALL NOT BE REPRODUCED (IN WHOLE OR IN PART), SHARED WITH THIRD PARTIES OR USED IN ANY MANNER ON OTHER PROJECTS OR EXTENSIONS TO THIS PROJECT WITHOUT THE PRIOR WRITTEN CONSENT OF STARBUCKS CORPORATION. THESE DRAWINGS AND SPECIFICATIONS ARE INTENDED TO EXPRESS DESIGN INTENT FOR A PROTOTYPICAL STARBUCKS STORE (WHICH IS SUBJECT TO CHANGE AT ANYTIME) AND DO NOT REFLECT ACTUAL SITE CONDITIONS. NEITHER PARTY SHALL HAVE ANY OBLIGATION NOR LIABILITY TO THE OTHER (EXCEPT STATED ABOVE) UNTIL A WRITTEN AGREEMENT IS FULLY EXECUTED BY BOTH PARTIES.

STARBUCKS TEMPLATE VERSION: i2024.01.01

PABLO GARCIA, AIA, REG. FL NO. AR99297

Gensler

MAIN OFFICE
M. ARTHUR GENSLER JR. & ASSOCIATES
FL QUALIFIER'S LIC. NO. AR99486
45 FREMONT ST, SUITE 1500
SAN FRANCISCO, CA 94105 USA
Tel (415) 433.3700
Fax (415) 836.4599

SATELLITE OFFICE
M. ARTHUR GENSLER JR. & ASSOCIATES
545 NW 26TH ST
SUITE 250
MIAMI, FL 33127 USA
Tel (305) 350.7070
Fax (305) 350.7071

PROJECT NAME:
NW 43RD & 53RD

PROJECT ADDRESS:
5480 NW 43RD STREET
GAINESVILLE, FL 32653

STORE #:	10820
PROJECT #:	34769-081
ISSUE DATE:	03-22-2024
DESIGN MANAGER:	ROMINA VIGNOLO
PRODUCTION DESIGNER:	GENSLER
CHECKED BY:	GENSLER

Revision Schedule

Rev	Date	By	Description

SHEET TITLE:
ADAPTABLE CASEWORK BASE PLAN
SCALE: AS SHOWN

SHEET NUMBER:
I102.1

ADAPTABLE CASEWORK FRAMEWORK SCHEDULE - "C"

DESIGN ID	COUNT	DESCRIPTION	FURN. BY	INST. BY	COMMENTS
DIEWALL					
21885	17	DIEWALL - FRAMING - VARIABLE LENGTH	SB	GC	
21888	48	DIEWALL - SUPPORT LEG	SB	GC	
23439	1	DIEWALL - WRM STRUCTURE LOWERED COUNTER	SB	GC	

KEYED NOTES

01 PROVIDE 3/4" BLOCKING TO 34" A.F.F. FOR ALL WALL BRACKETS TO SUPPORT CASEWORK LEG.

02 METAL SUPPORT LEG ADJACENT TO WALL TO BE SUPPORTED BY METAL ANGLE FASTENED TO WALL PER CONSTRUCTION DETAILS.

04 FOOD CASE.

05 RADIUS ENDCAP. FABRICATE USING TRADITIONAL CASEWORK CONSTRUCTION

06 ALIGN FRAMEWORK.

GENERAL NOTES

A. SEE SHEET I102 FOR COMPLETE CASEWORK SCHEDULE.

B. METAL COMPONENTS PROVIDED BY CASEWORK SUPPLIER UNLESS OTHERWISE NOTED.

C. G.C. TO PROVIDE CONTINUOUS WALL BLOCKING BEHIND CASEWORK.

D. CASEWORK FRAME AT BAR ENDS ARE SUPPORTED BY 90 DEGREE DIEWALL BASE.

E. ALL DIMENSIONS TAKEN FROM FRONTLINE DATUM POINT TO OUTSIDE CORNER OF DIEWALL BASE.

F. TOP EDGE OF DIEWALL FRAME TO BE INSTALLED AT 32 13/16" A.F.F. AT LOW POINT.

G. ALL DIMENSIONS ARE TO CENTER OF CABINET FRAME UNLESS NOTED OTHERWISE.

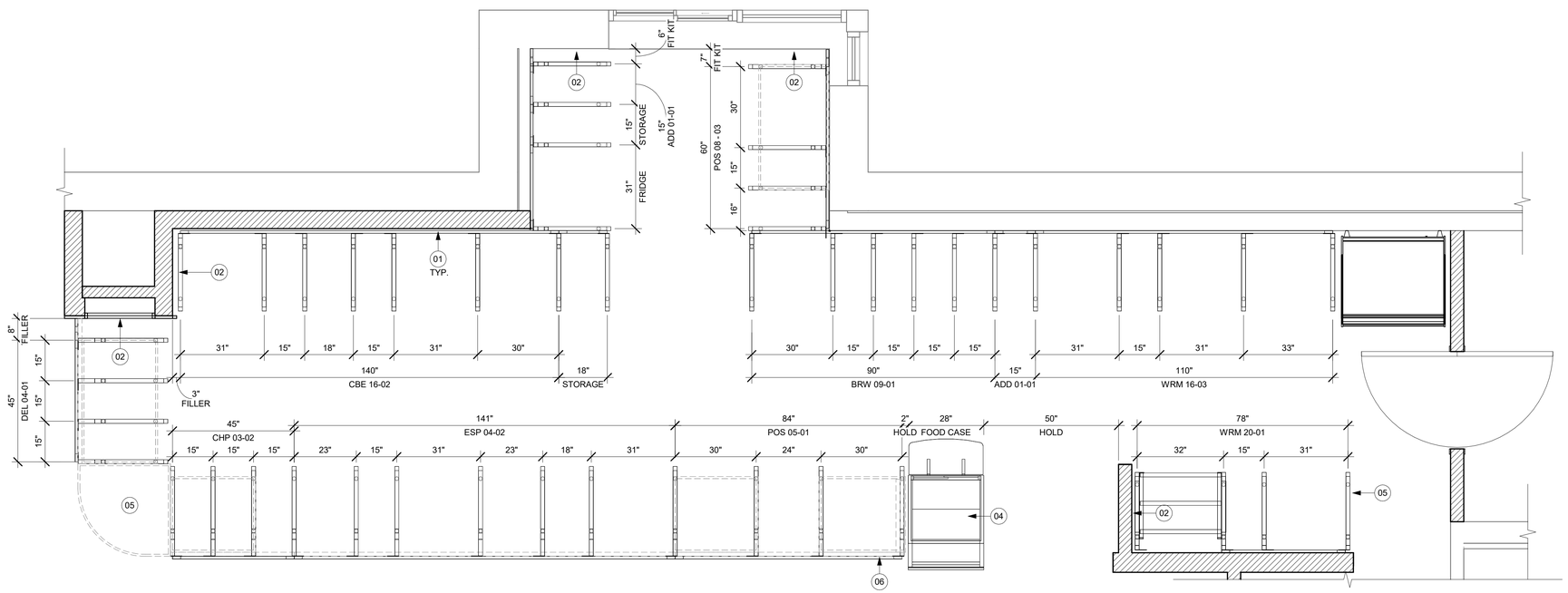

01 ADAPTABLE CASEWORK FRAMEWORK PLAN
Scale: 1/2" = 1'-0"

N

PERMIT SET - FOR CONSTRUCTION USE

© 2022 STARBUCKS COFFEE COMPANY

STARBUCKS®
2401 UTAH AVENUE SOUTH
SEATTLE, WASHINGTON 98134
(206) 318-1575

THESE DRAWINGS AND THE PROJECT MANUAL ARE CONFIDENTIAL AND SHALL REMAIN THE SOLE PROPERTY OF STARBUCKS CORPORATION, WHICH IS THE OWNER OF THE COPYRIGHT IN THIS WORK. THEY SHALL NOT BE REPRODUCED (IN WHOLE OR IN PART), SHARED WITH THIRD PARTIES OR USED IN ANY MANNER ON OTHER PROJECTS OR EXTENSIONS TO THIS PROJECT WITHOUT THE PRIOR WRITTEN CONSENT OF STARBUCKS CORPORATION. THESE DRAWINGS AND SPECIFICATIONS ARE INTENDED TO EXPRESS DESIGN INTENT FOR A PROTOTYPICAL STARBUCKS STORE (WHICH IS SUBJECT TO CHANGE AT ANYTIME) AND DO NOT REFLECT ACTUAL SITE CONDITIONS. NEITHER PARTY SHALL HAVE ANY OBLIGATION NOR LIABILITY TO THE OTHER (EXCEPT STATED ABOVE) UNTIL A WRITTEN AGREEMENT IS FULLY EXECUTED BY BOTH PARTIES.

STARBUCKS TEMPLATE VERSION: i2024.01.01

PABLO GARCIA, AIA, REG. FL NO. AR99297

Gensler
MAIN OFFICE
M. ARTHUR GENSLER JR. & ASSOCIATES
FL QUALIFIER'S LIC. NO. AR96486
45 FREMONT ST, SUITE 1500
SAN FRANCISCO, CA 94105 USA
Tel (415) 433.3700
Fax (415) 836.4599

SATELLITE OFFICE
M. ARTHUR GENSLER JR. & ASSOCIATES
540 NW 26TH ST
SUITE 250
MIAMI, FL 33127 USA
Tel (305) 350.7070
Fax (305) 350.7071

PROJECT NAME:
NW 43RD & 53RD

PROJECT ADDRESS:
5480 NW 43RD STREET
GAINESVILLE, FL 32653

STORE #: 10820
PROJECT #: 34769-081
ISSUE DATE: 03-22-2024
DESIGN MANAGER: ROMINA VIGNOLO
PRODUCTION DESIGNER: GENSLER
CHECKED BY: GENSLER

Revision Schedule

Rev	Date	By	Description

SHEET TITLE:
ADAPTABLE CASEWORK FRAMEWORK PLAN
SCALE: AS SHOWN

SHEET NUMBER:
I102.2

ADAPTABLE CASEWORK CABINET TYPES AND BILL OF MATERIALS SCHEDULE

KEY NUMBER	CABINET TYPE	FULL HT. DOORS	3/4 DOOR	3/4 DOOR W/ VENT	DRAWER	BOTTOM SHELF	ADJUST. SHELF	BACK PANEL	SIDE PANELS	BOX BASE^^
101	15" STORAGE	1 DID 21894	N/A	N/A	N/A	1 DID 21891	1 DID 21893	1 DID 21892	2** DID 21890	NO
102	18" STORAGE	1 DID 21901	N/A	N/A	N/A	1 DID 21898	1 DID 21900	1 DID 21899	2** DID 21890	NO
103	30" STORAGE	2 DID 21905	N/A	N/A	N/A	1 DID 21902	1 DID 21904	1 DID 21903	2** DID 21890	NO
104	30" POS	N/A	N/A	N/A	N/A	1 DID 21902	2 DID 21904	1 DID 21912	2** DID 21890	NO
105	21" POS	N/A	N/A	N/A	N/A	1 DID 22982	2 DID 22980	1 DID 22981	2** DID 21890	NO
106	15" DRAWER	N/A	1 DID 21895	N/A	1 DID 21896	1 DID 21891	1 DID 21893	1 DID 21892	2** DID 21890	NO
107	15" PRODUCTION CONTROLLER	N/A	N/A	1 DID 21897	1 DID 21896	1 DID 21891	1 DID 21893	1 DID 21892	2** DID 21890	NO
108	15" CUBBY - COFFEE	N/A	N/A	N/A	N/A	1 DID 21891	1 DID 21893	1 DID 21892	2** DID 21890	NO
109	15" CUBBY - TRASH	N/A	1/0* DID 21895	N/A	N/A	N/A	0	0	2** DID 21890	NO
110	15" SINK	1/0* DID 21894	N/A	N/A	N/A	1^ DID 21891	0	0	2** DID 21890	NO
111	15" ICE BIN	1/0* DID 21894	N/A	N/A	N/A	N/A	0	0	0 (1,2)** DID 21890	NO
112	24" SAFE	N/A	N/A	N/A	N/A	N/A	0	0	0 (1,2)** DID 21890	NO
113	30" REFRIGERATOR	N/A	N/A	N/A	N/A	N/A	0	0	0 (1,2)** DID 21890	NO
114	15" DEL	N/A	N/A	N/A	1 DID 22986	1 DID 21891	0	1 DID 21892	2** DID 21890	NO
115	18" SINK	1/0* DID 21901	N/A	N/A	N/A	1 DID 21898	0	1 DID 21899	2** DID 21890	NO
116	30" COMBI OVEN	N/A	1 DID 23425	N/A	N/A	N/A	0	0	2** DID 21890	NO

*** DOOR NOT REQUIRED WHERE CUSTOMER VIEW IS LIMITED OR NEGLIGIBLE (i.e. FRONTLINE OR BEHIND WALLS)**

**** SIDE PANEL QUANTITY SHOWN IS FOR STAND-ALONE CABINETS; ACUTAL SIDE PANEL QUANTITY IS DEPENDENT ON ADJACENT CABINET TYPE AS SIDE PANELS CAN BE SHARED.**

^ BOTTOM SHELF AND BOX BASE (IF APPLICABLE), SHOULD BE REMOVED AT SINK/ICE BIN CABINETS WITH FLOOR SINK LOCATED...

^^ BOX BASE TO BE PROVIDED AT SPECIFIC CABINETS WHEN REQUIRED BY JURISDICTIONAL CODE OR LOCAL OPERATOR PREFERENCE (NOTED AS "YES")

ADAPTABLE CASEWORK SUBSTRATE PANEL SCHEDULE - "C"

DESIGN ID	COUNT	DESCRIPTION	FURN. BY	INST. BY	COMMENTS
DIEWALL					
21887	5	DIEWALL - SUBSTRATE PANEL - VARIABLE LENGTH	SB	GC	

KEYED NOTES

01 NITRO EQUIPMENT LOCATION.
02 FOOD CASE.
03 FILLER FINISH PANEL TO BE SHIPPED LONGER THAN DIMENSIONED AND CUT TO FIT IN FIELD.
04 FOOD WARMING WALL STATION.
05 CASEWORK SUPPLIER TO PROVIDE ADDITIONAL BACKER SUBSTRATE TO ALIGN END CAP PANEL TO ADJACENT DOOR FACES.

GENERAL NOTES

A. SEE SHEET I601 FOR COMPLETE CASEWORK SCHEDULE.

B. ALL DIMENSIONS ARE TO CENTER OF FRAME ASSEMBLY.

C. CABINET PANELS:
> ALL CABINET SHELVING TO BE SECURED TO METAL COMPONENTS WITH #8 ROUND HEAD SCREWS.
> ALL METAL COMPONENTS SHALL BE SECURED TO FRAME ASSEMBLY AT KEY HOLE LOCATIONS.
> BOTTOM FLASHING SECURED TO HDPE WITH SILICONE.

D. SUBSTRATE PANELS:
> SUBSTRATE PANELS SHALL BE MOISTURE RESISTANT (MR) PLYWOOD, MDF OR HDF.
> CASEWORK VENDOR SHALL PROVIDE ALL SUB PANELS TO BE CUT TO SIZE PRIOR TO SHIPPING.
> CASEWORK VENDOR SHALL APPLY Z-CLIPS TO FINISH PANELS PRIOR TO SHIPPING.
> FRONTLINE PANELS TO BE SECURED TO SUBSTRATE VIA Z-CLIP APPLICATION.
> PANEL INSTALLATION TO START AT OUTSIDE CORNER LOCATIONS.
> END PANELS TO BE SCRIBED ON SITE.
> ALL PANEL CUT-OUTS SHALL BE FINISHED ALL AROUND.
> Z-CLIPS TO BE INSTALLED 1" AWAY FROM PANEL EDGE.

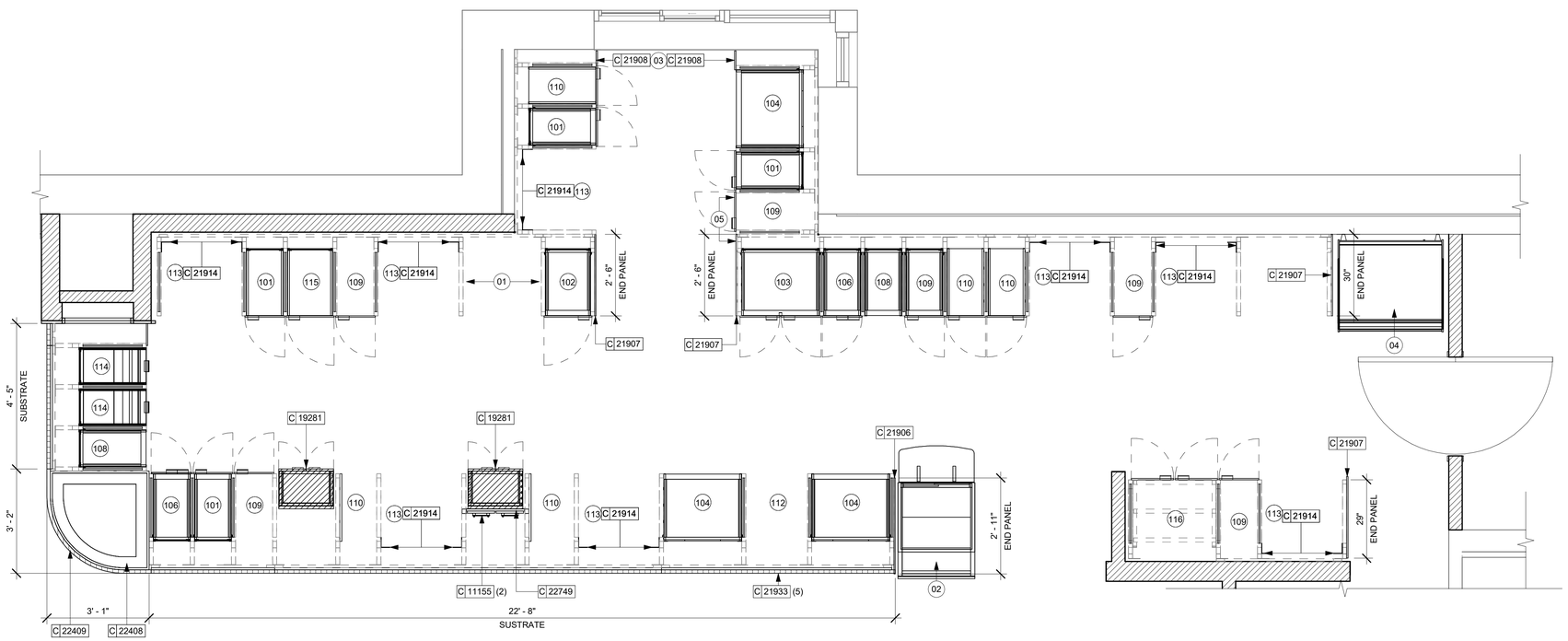

01 ADAPTABLE CASEWORK CABINET PLAN
Scale: 1/2" = 1'-0"

N

PERMIT SET - FOR CONSTRUCTION USE

© 2022 STARBUCKS COFFEE COMPANY

STARBUCKS®
2401 UTAH AVENUE SOUTH
SEATTLE, WASHINGTON 98134
(206) 318-1575

THESE DRAWINGS AND THE PROJECT MANUAL ARE CONFIDENTIAL AND SHALL REMAIN THE SOLE PROPERTY OF STARBUCKS CORPORATION, WHICH IS THE OWNER OF THE COPYRIGHT IN THIS WORK. THEY SHALL NOT BE REPRODUCED (IN WHOLE OR IN PART), SHARED WITH THIRD PARTIES OR USED IN ANY MANNER ON OTHER PROJECTS OR EXTENSIONS TO THIS PROJECT WITHOUT THE PRIOR WRITTEN CONSENT OF STARBUCKS CORPORATION. THESE DRAWINGS AND SPECIFICATIONS ARE INTENDED TO EXPRESS DESIGN INTENT FOR A PROTOTYPICAL STARBUCKS STORE (WHICH IS SUBJECT TO CHANGE AT ANYTIME) AND DO NOT REFLECT ACTUAL SITE CONDITIONS. NEITHER PARTY SHALL HAVE ANY OBLIGATION NOR LIABILITY TO THE OTHER (EXCEPT STATED ABOVE) UNTIL A WRITTEN AGREEMENT IS FULLY EXECUTED BY BOTH PARTIES.

STARBUCKS TEMPLATE VERSION: i2024.01.01

PABLO GARCIA, AIA, REG. FL NO. AR99297

Gensler
MAIN OFFICE
M. ARTHUR GENSLER JR. & ASSOCIATES
FL QUALIFIER'S LIC. NO. AR96486
45 FREMONT ST, SUITE 1500
SAN FRANCISCO, CA 94105 USA
Tel (415) 433.3700
Fax (415) 836.4599

SATELLITE OFFICE
M. ARTHUR GENSLER JR. & ASSOCIATES
540 NW 26TH ST
SUITE 250
MIAMI, FL 33127 USA
Tel (305) 350.7070
Fax (305) 350.7071

PROJECT NAME:
NW 43RD & 53RD

PROJECT ADDRESS:
5480 NW 43RD STREET
GAINESVILLE, FL 32653

STORE #:	10820
PROJECT #:	34769-081
ISSUE DATE:	03-22-2024
DESIGN MANAGER:	ROMINA VIGNOLO
PRODUCTION DESIGNER:	GENSLER
CHECKED BY:	GENSLER

Revision Schedule

Rev	Date	By	Description

SHEET TITLE:
ADAPTABLE CASEWORK CABINET PLAN
SCALE: AS SHOWN

SHEET NUMBER:
I102.3

ADAPTABLE CASEWORK COUNTERTOP SCHEDULE - "C"					
DESIGN ID	COUNT	DESCRIPTION	FURN. BY	INST. BY	COMMENTS
COUNTERTOP					
21918	1	COUNTERTOP - FILLER FRONTBAR - VARIABLE LENGTH	SB	GC	
21919	8	COUNTERTOP - FILLER BACKBAR - VARIABLE LENGTH	<varies>	<varies>	
21923	1	COUNTERTOP - END CAP FRONTBAR	SB	GC	
21925	1	COUNTERTOP - BACKBAR - 15IN 380MM	SB	GC	
21926	1	COUNTERTOP - BACKBAR - 18IN 455MM	SB	GC	
21928	4	COUNTERTOP - END CAP BACKBAR	SB	GC	
22328	1	COUNTERTOP - BREW - LF - 90IN 2285MM	SB	GC	
22352	1	COUNTERTOP - ESPRESSO FRONTBAR - LF - 141IN 3580MM	SB	GC	
22354	1	COUNTERTOP - ESPRESSO SHROUD - 141IN 3580MM	SB	GC	
22361	1	COUNTERTOP - POS - 84IN 2135MM	SB	GC	
22364	1	COUNTERTOP - DT POS - LF - 94IN 2390MM	SB	GC	
22385	1	COUNTERTOP - WARMING WITH RACK - RF - 110IN 2795MM	SB	GC	
22390	1	COUNTERTOP - CONSOLIDATED HANDOFF - RF - 45IN 1145MM	SB	GC	
22394	3	COUNTERTOP - BACKSPLASH - VARIABLE LENGTH	SB	GC	
22395	2	COUNTERTOP - HAND SINK LOW SPLASH - 15IN 380MM	SB	GC	
22407	1	COUNTERTOP - CORNER FRONTBAR ROUNDED	SB	GC	
22979	1	COUNTERTOP - FRONTBAR - 45IN 1145MM	SB	GC	
23403	1	COUNTERTOP - CBE IN-LINE RF - 139IN 3530MM	SB	GC	
23430	1	COUNTERTOP - WRM RF - 78IN 1980MM	SB	GC	

KEYED NOTES

01 LOCATE WATER TROUGH AT EDGE OF COUNTERTOP AS SHOWN.
02 RAISED EDGE GROMMETS WITH 1 1/2IN RADIUS.
03 CORIAN SHROUD AT ESPRESSO BAR.
04 CUT OUT FOR RECESSED SINK, ICE BIN OR TRASH DROP. SEE EQUIPMENT AND/OR MANUFACTURER'S CUTSHEETS FOR DIMENSIONS.
05 FOOD CASE.
06 OVERHANG EDGE 6IN.
07 BACKBAR W/ 8IN INTEGRAL BACKSPLASH.

GENERAL NOTES

A. SEE SHEET I601 FOR COMPLETE CASEWORK SCHEDULE.
B. G.C.'S INSTALLER SHALL VERIFY COUNTER CHANNEL REQUIREMENTS PRIOR TO CUTTING IN FIELD.
C. G.C./INSTALLER TO VERIFY COUNTERTOP SUPPORT CHANNEL MEASUREMENTS PRIOR TO CUTTING. FIELD CUT AT SINKS AND ICE BINS.
D. "C" CHANNEL MOUNTS OVER FRONT AND REAR INDEX BRACKETS WHICH ARE INSERTED INTO FRAMEWORK.
E. SILICONE SEAM AT TRANSITION FROM COUNTERTOP TO HAND SINKS.
F. SILICONE AND SEAL ALL SEAMS BETWEEN SINKS, EQUIPMENT AND COUNTERTOPS.
G. ONCE COUNTERTOP IS SET, LEVELED AND SEAMED, SECURE CHANNEL TO UNDERSIDE OF SUBSTRATE.
H. RAISED EDGE GROMMETS SHALL HAVE 2 INCH RADIUS UNLESS NOTED OTHERWISE.

LEGEND

INDICATES STAINLESS STEEL (SST) COUNTERTOP
INDICATES SOLID SURFACE (SS) COUNTERTOP
DATUM POINT

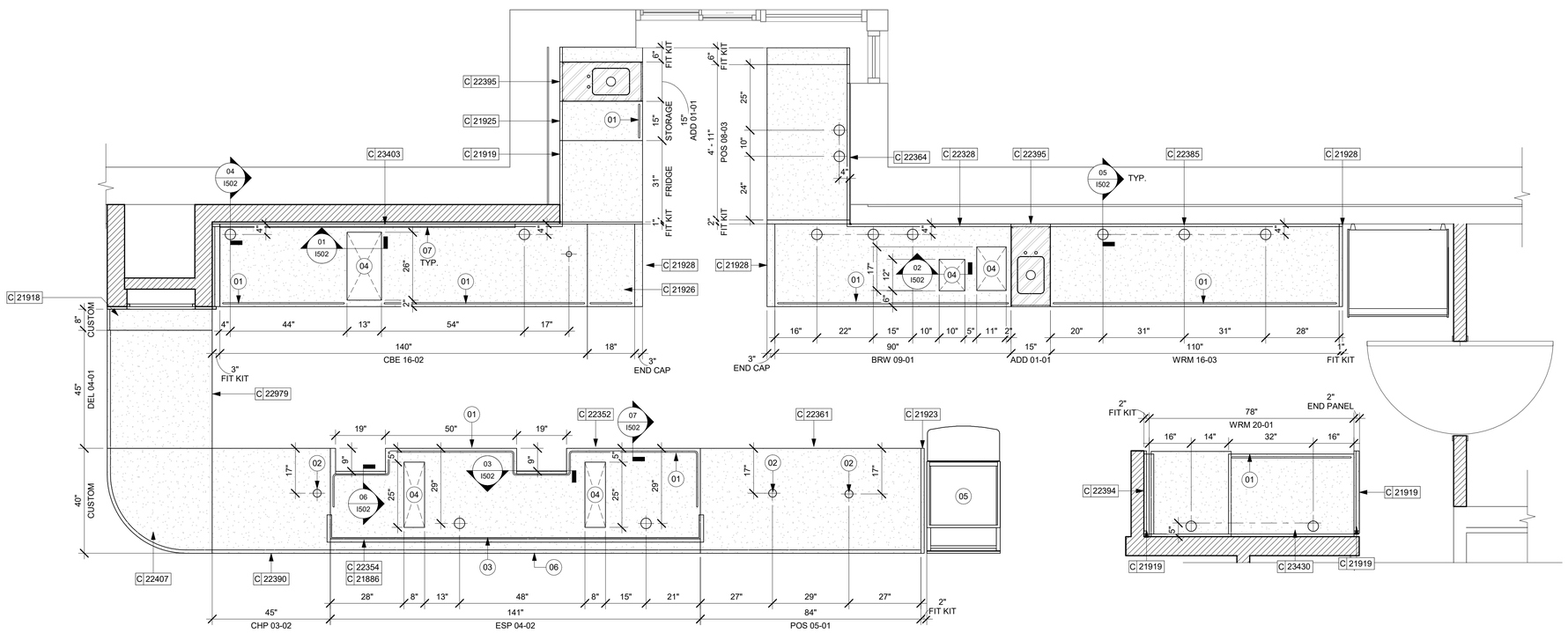

01 ADAPTABLE CASEWORK COUNTERTOP PLAN
Scale: 1/2" = 1'-0"

N

PERMIT SET - FOR CONSTRUCTION USE

© 2022 STARBUCKS COFFEE COMPANY

STARBUCKS®
2401 UTAH AVENUE SOUTH
SEATTLE, WASHINGTON 98134
(206) 318-1575

THESE DRAWINGS AND THE PROJECT MANUAL ARE CONFIDENTIAL AND SHALL REMAIN THE SOLE PROPERTY OF STARBUCKS CORPORATION, WHICH IS THE OWNER OF THE COPYRIGHT IN THIS WORK. THEY SHALL NOT BE REPRODUCED (IN WHOLE OR IN PART), SHARED WITH THIRD PARTIES OR USED IN ANY MANNER ON OTHER PROJECTS OR EXTENSIONS TO THIS PROJECT WITHOUT THE PRIOR WRITTEN CONSENT OF STARBUCKS CORPORATION. THESE DRAWINGS AND SPECIFICATIONS ARE INTENDED TO EXPRESS DESIGN INTENT FOR A PROTOTYPICAL STARBUCKS STORE (WHICH IS SUBJECT TO CHANGE AT ANYTIME) AND DO NOT REFLECT ACTUAL SITE CONDITIONS. NEITHER PARTY SHALL HAVE ANY OBLIGATION NOR LIABILITY TO THE OTHER (EXCEPT STATED ABOVE) UNTIL A WRITTEN AGREEMENT IS FULLY EXECUTED BY BOTH PARTIES.

STARBUCKS TEMPLATE VERSION: i2024.01.01

PABLO GARCIA, AIA, REG. FL NO. AR99297

Gensler
MAIN OFFICE
M. ARTHUR GENSLER JR. & ASSOCIATES
FL QUALIFIER'S LIC. NO. AR96486
43 FREMONT ST, SUITE 1500
SAN FRANCISCO, CA 94105 USA
Tel (415) 433.3700
Fax (415) 836.4599

SATELLITE OFFICE
M. ARTHUR GENSLER JR. & ASSOCIATES
545 NW 26TH ST
SUITE 250
MIAMI, FL 33127 USA
Tel (305) 350.7070
Fax (305) 350.7071

PROJECT NAME:
NW 43RD & 53RD

PROJECT ADDRESS:
5480 NW 43RD STREET
GAINESVILLE, FL 32653

STORE #:	10820
PROJECT #:	34769-081
ISSUE DATE:	03-22-2024
DESIGN MANAGER:	ROMINA VIGNOLO
PRODUCTION DESIGNER:	GENSLER
CHECKED BY:	GENSLER

Revision Schedule

Rev	Date	By	Description

SHEET TITLE:
ADAPTABLE CASEWORK COUNTERTOP PLAN
SCALE: AS SHOWN

SHEET NUMBER:
I102.4

LIGHTING FIXTURE SCHEDULE - "L"

DESIGN ID	COUNT	DESCRIPTION	FURN. BY	INST. BY	BULB	COMMENTS
EXIT						
19047	3	LED EXIT SIGN WITH EMERGENCY LIGHT - BLACK AND GREEN	SB	GC	INTEGRATED LED	
PENDANT						
20686	1	PENDANT - FLOS IC SMALL - BRASS	SB	GC	AS PACKAGED: 1X LED 5W CANDELABRA BASE	
RECESSED CAN						
X0601	29	CAN - LED ADJUSTABLE RECESSED - 3IN 75MM - BLACK - 1155LM FLOOD	SB	GC	INTEGRATED LED	WITH DIMMER.
STRIP						
22215	1	STRIP - LED TAPE IN HOUSING - VARIABLE LENGTH - BLACK - 350LM PER FT	SB	GC	INTEGRATED LED	FIELD TRIMMABLE TO 0.9IN LENGTHS
22217	1	STRIP - LED TAPE - VARIABLE LENGTH - 350LM PER FT	SB	GC	INTEGRATED LED	FIELD TRIMMABLE TO 0.9IN LENGTHS
TRACK						
15059	1	TRACK - WITH CONNECTORS - 6FT 183CM - WHITE - 1 CIRCUIT	SB	GC		
19410	6	TRACK - WITH CONNECTORS - 6FT 183CM - BLACK - 2 CIRCUIT	SB	GC		
19411	8	TRACK - WITH CONNECTORS - 8FT 244CM - BLACK - 2 CIRCUIT	SB	GC		
21779	28	TRACK - LED FIXTURE WITH SNOOT - 3IN 75MM - BLACK - 1100LM FLOOD	SB	GC	INTEGRATED LED	
TROFFER						
21783	1	TROFFER - LED RECESSED - 24X48IN 600X1200MM - WHITE - 4300LM	SB	GC	INTEGRATED LED	

PAINT SCHEDULE

DESIGN ID	DESCRIPTION	LRV	FURN. BY	INST. BY	COMMENTS
20438	SW7020 BLACK FOX, OR EQUIVALENT	7	GC	GC	SW USE PRIMER CP-1; NCS - S 7502-Y; AKZO NOBEL - 30YY 10/038
20456	SW7631 CITY LOFT, OR EQUIVALENT	70	GC	GC	SW USE PRIMER CP-1; NCS - S 2002-Y50R; AKZO NOBEL - 40YY 73/028
X0300	SW7037 BALANCED BEIGE, OR EQUIVALENT	48	GC	GC	SW USE PRIMER CP-1; NCS - S 2002-Y50R; AKZO NOBEL - 40YY 73/028
X0301	SW7039 VIRTUAL TAUPE, OR EQUIVALENT	20	GC	GC	SW USE PRIMER CP-1; NCS - S 2002-Y50R; AKZO NOBEL - 40YY 73/028

CEILING TREATMENT SCHEDULE - "U"

DESIGN ID	AREA	DESCRIPTION	FURN. BY	INST. BY	COMMENTS
OTHER					
11302	51 SF	ACT - WHITE - 2X4FT 61X122CM	GC	GC	VINYL CLAD ACT AT BOH AREA
X1100	708 SF	GWB CEILING WITH LEVEL 4 FINISH - PAINT AS SCHEDULED	GC	GC	FINISH: REFER TO RCP PLAN AT I103 FOR TONE TAG; INSTALLATION SHALL BE IN STRICT ACCORDANCE W/ MANUFACTURER'S INSTRUCTIONS.
PLASTIC					
X1101	51 SF	ACT - CIRRUS BELEVED SUPRAFINE SUSPENSION - WHITE - 2X4FT 61X122CM	GC	GC	WITH MANUFACTURER'S INSTRUCTIONS

KEYED NOTES

01 INSTALL RECESSED CAN FIXTURES AS SCHEDULED. REFER TO ELECTRICAL SHEETS FOR ADDITIONALINFORMATION.

03 WASHABLE CEILING TILE LOCATED IN BACK OF HOUSE. EXISTING TILES TO BE CLEANED/ REPAIRED OR REPLACED TO ACHIEVE LIKE-NEW CONDITION.

04 EXISTING PLATFORM FOR WATER HEATER AND WATER FILTRATION.

05 SECURITY CAMERA LOCATION FOR REFERENCE. INSTALL AT SAME HEIGHT AS ADJACENT STORE LIGHTING. THIRD PARTY VENDOR TO DETERMINE FINAL LOCATIONS WITH STARBUCKS' CONSTRUCTION MANAGER.

06 SUSPENDED MOP SIGNAGE. REFER TO INTERIOR FINISH ELEVATIONS FOR DROP LENGTH AND SCHEDULE FOR ADDITIONAL INFORMATION.

07 INSTALL DIGITAL MENU AS SCHEDULED PER INDICATED DETAILS. REFER TO INTERIOR FINISH ELEVATIONS SHEETS FOR MOUNTING HEIGHTS.

08 WIRELESS ACCESS POINT: LOCATE (2) PER STORE, ONE ABOVE POS, ONE NEAR MANAGER'S WORKSTATION.

09 BLOCKING TO BE PROVIDED AS REQUIRED TO SUPPORT CBE CABINET ATTACHMENT. EXTEND BLOCKING 4" (100MM) BEYOND EDGE OF ATTACHMENTS.

10 INSTALL LED STRIP LIGHT AS INDICATED. REFER TO CASEWORK DETAIL.

11 EXISTING EXTERIOR SECURITY LIGHT BY LL.

12 EXISTING EXTERIOR WALL SCONCES BY LL.

26 RECESSED PENDANT MOUNTED MUSIC SPEAKER. LOCATE PER PLANS. FINISH COLOR TO BE BLACK OR PAINT TO MATCH ADJACENT FINISH.

GENERAL NOTES

A. REFERENCE LOW VOLTAGE PLAN SHEET AND ELECTRICAL DRAWINGS.

B. IF REQUIRED BY LOCAL CODE, GENERAL CONTRACTOR TO PROVIDE SEMI-RECESSED SPRINKLER HEADS WITH POLISHED CHROME ESCUTCHEONS CENTERED IN ACOUSTICAL CEILING TILE. IF PENDANT HEADS ARE REQUIRED IN GWB SOFFIT OVER FRONT BAR, CONCEAL SUPPLY PIPING WITHIN SOFFIT. GENERAL CONTRACTOR TO SUBMIT SPRINKLER LAYOUT TO STARBUCKS' CONSTRUCTION MANAGER FOR APPROVAL PRIOR TO INSTALLATION.

C. LEAVE TEN (10) ADDITIONAL RETAIL CEILING TILES TO MATCH RETAIL CEILING PAINT COLOR ABOVE THE WORKROOM CEILING AT MANAGER'S DESK FOR FUTURE USE.

D. PROVIDE GROMMET AT ACOUSTIC CEILING PENETRATIONS FOR FIXTURES OF SUPPORTS.

E. HEATING, VENTILATING AND AIR CONDITIONING SHOWN ON THIS PLAN PROVIDED FOR REFERENCE ONLY. SEE MECHANICAL DRAWINGS FOR ADDITIONAL INFORMATION.

F. DIFFUSERS AND RETURNS IN ACOUSTICAL CEILING TILE TO BE CENTERED IN TILE AND PAINTED TO MATCH ADJACENT FINISHES (TYP.).

G. PAINT ALL EXPOSED HVAC DUCTS, HVAC DIFFUSERS, LIGHT TRIM RINGS, PIPING, CONDUIT AND JUNCTION BOXES THE SAME COLOR AS SPECIFIED ON SURROUNDING CEILING OR SOFFIT UNLESS OTHERWISE NOTED. TYPICAL THROUGHOUT RETAIL AREA OF STORE.

H. PAINT SUBSTITUTIONS ARE NOT ALLOWED. USE STARBUCKS' NATIONAL ACCOUNT "COLOR CODE" WHEN ORDERING PAINTS.

I. OVERHEAD DATA CABLING SHALL BE IN PLENUM WHEN AVAILABLE.

J. DATA CABLING AT EXPOSED CEILING SHALL BE INSTALLED IN METAL CONDUIT OR PER LOCAL CODE REQUIREMENT.

K. PAINT CEILING DIFFUSERS TO MATCH ADJACENT CEILING AS INDICATED IN PAINT SCHEDULE TONE.

LIGHTING LEGEND

- CUSTOM CAN - LED ADJUSTABLE RECESSED - 3IN 75MM - BLACK - 1155LM FLOOD WITH DIMMER — L X0601
- TRACK - LED FIXTURE WITH SNOOT - 3IN 75MM - BLACK - 1100LM FLOOD — L 21779
- STRIP - LED TAPE IN HOUSING - VARIABLE LENGTH - BLACK - 350LM PER FT — L 22217
- STRIP - LED TAPE IN HOUSING - VARIABLE LENGTH - BLACK - 350LM PER FT - UNDER COUNTER — L 22217
- LIGHT DIRECTIONAL SYMBOL

NOTE: LEGEND IS DEPENDENT ON COLORS USED FOR COMPLETE SCOPE INFORMATION.

LEGEND

- EXISTING ITEM/EQUIPMENT FOR FUTURE
- EXISTING ITEM/EQUIPMENT TO BE REUSED
- EXISTING ITEM/EQUIPMENT TO REMAIN
- ADJACENT TENANT

NOTE: LEGEND IS DEPENDENT ON COLORS USED FOR COMPLETE SCOPE INFORMATION.

- ELEVATION DATUM
- TRACK LIGHTING
- STRIP LIGHTING
- PENDANT LIGHT
- RECESSED CAN LIGHT
- TROFFER
- EXIT SECURITY LIGHT
- EXIT SIGN/ EMERGENCY LIGHTING COMBO
- MUSIC SYSTEM WALL MOUNTED SPEAKER
- 360° SECURITY CAMERA
- SUPPLY AIR
- RETURN AIR
- EXHAUST FAN
- PIR MOTION SENSOR
- WALL MOUNTED SPEAKER
- WALL SCONCE AT RESTROOM
- WIFI ACCESS POINT (WAP)
- (E) 2'X2' ACT SUSPENDED CEILING SYSTEM
- (E) 2'X4' ACT SUSPENDED CEILING SYSTEM

REFER TO SHEET I103.1 FOR LIGHTING LOCATIONS AND INFORMATION.

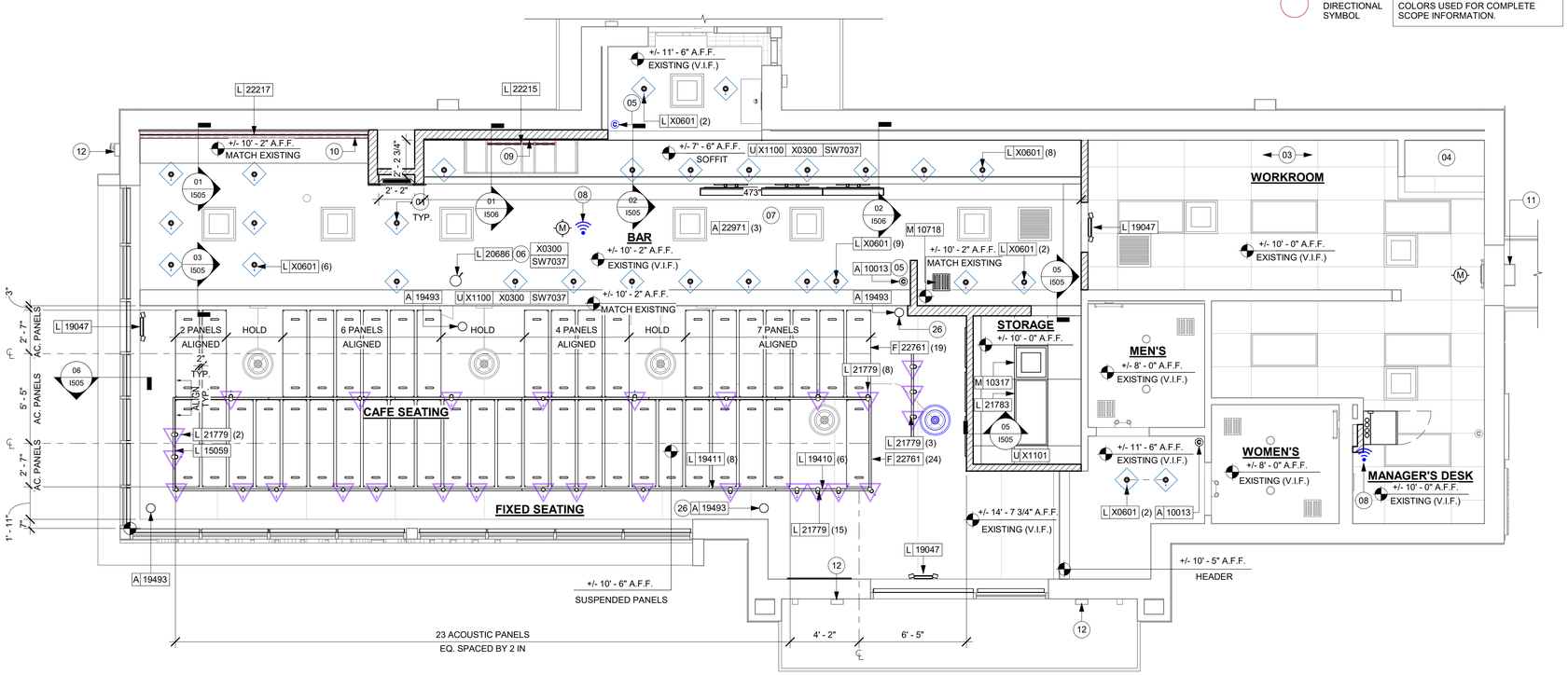

01 REFLECTED CEILING PLAN
Scale: 1/4" = 1'-0"

PERMIT SET - FOR CONSTRUCTION USE

© 2022 STARBUCKS COFFEE COMPANY

STARBUCKS®
2401 UTAH AVENUE SOUTH
SEATTLE, WASHINGTON 98134
(206) 318-1575

THESE DRAWINGS AND THE PROJECT MANUAL ARE CONFIDENTIAL AND SHALL REMAIN THE SOLE PROPERTY OF STARBUCKS CORPORATION, WHICH IS THE OWNER OF THE COPYRIGHT IN THIS WORK. THEY SHALL NOT BE REPRODUCED (IN WHOLE OR IN PART), SHARED WITH THIRD PARTIES OR USED IN ANY MANNER ON OTHER PROJECTS OR EXTENSIONS TO THIS PROJECT WITHOUT THE PRIOR WRITTEN CONSENT OF STARBUCKS CORPORATION. THESE DRAWINGS AND SPECIFICATIONS ARE INTENDED TO EXPRESS DESIGN INTENT FOR A PROTOTYPICAL STARBUCKS STORE (WHICH IS SUBJECT TO CHANGE AT ANYTIME) AND DO NOT REFLECT ACTUAL SITE CONDITIONS. NEITHER PARTY SHALL HAVE ANY OBLIGATION NOR LIABILITY TO THE OTHER (EXCEPT STATED ABOVE) UNTIL A WRITTEN AGREEMENT IS FULLY EXECUTED BY BOTH PARTIES.

STARBUCKS TEMPLATE VERSION: i2024.01.01

PABLO GARCIA, AIA, REG. FL NO. AR99297

Gensler

MAIN OFFICE
M. ARTHUR GENSLER JR. & ASSOCIATES
FL QUALIFIER'S LIC. NO. AR96486
40 FREMONT ST, SUITE 1500
SAN FRANCISCO, CA 94105 USA
Tel (415) 433.3700
Fax (415) 836.4599

SATELLITE OFFICE
M. ARTHUR GENSLER JR. & ASSOCIATES
545 NW 26TH ST
SUITE 250
MIAMI, FL 33127 USA
Tel (305) 350.7070
Fax (305) 350.7071

PROJECT NAME:
NW 43RD & 53RD

PROJECT ADDRESS:
5480 NW 43RD STREET
GAINESVILLE, FL 32653

STORE #:	10820
PROJECT #:	34769-081
ISSUE DATE:	03-22-2024
DESIGN MANAGER:	ROMINA VIGNOLO
PRODUCTION DESIGNER:	GENSLER
CHECKED BY:	GENSLER

Revision Schedule

Rev	Date	By	Description

SHEET TITLE:
REFLECTED CEILING PLAN
SCALE: AS SHOWN

SHEET NUMBER:
I103

LIGHTING FIXTURE SCHEDULE - "L"

DESIGN ID	COUNT	DESCRIPTION	FURN. BY	INST. BY	BULB	COMMENTS
EXIT						
19047	3	LED EXIT SIGN WITH EMERGENCY LIGHT - BLACK AND GREEN	SB	GC	INTEGRATED LED	
PENDANT						
20686	1	PENDANT - FLOS IC SMALL - BRASS	SB	GC	AS PACKAGED: 1X LED 5W CANDELABRA BASE	
RECESSED CAN						
X0601	29	CAN - LED ADJUSTABLE RECESSED - 3IN 75MM - BLACK - 1155LM FLOOD	SB	GC	INTEGRATED LED	WITH DIMMER.
STRIP						
22215	1	STRIP - LED TAPE IN HOUSING - VARIABLE LENGTH - BLACK - 350LM PER FT	SB	GC	INTEGRATED LED	FIELD TRIMMABLE TO 0.9IN LENGTHS
22217	1	STRIP - LED TAPE - VARIABLE LENGTH - 350LM PER FT	SB	GC	INTEGRATED LED	FIELD TRIMMABLE TO 0.9IN LENGTHS
TRACK						
15059	1	TRACK - WITH CONNECTORS - 6FT 183CM - WHITE - 1 CIRCUIT	SB	GC		
19410	6	TRACK - WITH CONNECTORS - 6FT 183CM - BLACK - 2 CIRCUIT	SB	GC		
19411	8	TRACK - WITH CONNECTORS - 8FT 244CM - BLACK - 2 CIRCUIT	SB	GC		
21779	28	TRACK - LED FIXTURE WITH SNOOT - 3IN 75MM - BLACK - 1100LM FLOOD	SB	GC	INTEGRATED LED	
TROFFER						
21783	1	TROFFER - LED RECESSED - 24X48IN 600X1200MM - WHITE - 4300LM	SB	GC	INTEGRATED LED	

LIGHTING LEGEND

- CUSTOM CAN - LED ADJUSTABLE RECESSED - 3IN 75MM - BLACK - 1155LM FLOOD WITH DIMMER — L X0601
- TRACK - LED FIXTURE WITH SNOOT - 3IN 75MM - BLACK - 1100LM FLOOD — L 21779
- STRIP - LED TAPE IN HOUSING - VARIABLE LENGTH - BLACK - 350LM PER FT — L 22217
- STRIP - LED TAPE IN HOUSING - VARIABLE LENGTH - BLACK - 350LM PER FT - UNDER COUNTER — L 22217
- LIGHT DIRECTIONAL SYMBOL

NOTE: LEGEND IS DEPENDENT ON COLORS USED FOR COMPLETE SCOPE INFORMATION.

KEYED NOTES

01 CENTER EMERGENCY FIXTURE. REFER TO INTERIOR ELEVATIONS FOR MOUNTING HEIGHTS AND ELECTRICAL SHEETS FOR ADDITIONAL INFORMATION. GC TO VERIFY FINAL PLACEMENT WITH LOCAL FIRE MARSHA)L PRIOR TO INSTALLATION.

02 MOP SIGNAGE. REFER TO INTERIOR FINISH ELEVATIONS.

03 RECESSED PENDANT MOUNTED MUSIC SPEAKER. LOCATE PER PLANS. FINISH COLOR TO BE BLACK OR PAINT TO MATCH ADJACENT FINISH.

04 BLOCKING TO BE PROVIDED AS REQUIRED TO SUPPORT CBE CABINET ATTACHMENT. EXTEND BLOCKING 4" (100MM) BEYOND EDGE OF ATTACHMENTS.

05 STARTING POINT FOR CEILING TILE GRID INSTALLATION. TYPE AND FINISH AS SCHEDULED.

GENERAL NOTES

A. REFERENCE LOW VOLTAGE PLAN SHEET AND ELECTRICAL DRAWINGS.

B. IF REQUIRED BY LOCAL CODE, GENERAL CONTRACTOR TO PROVIDE SEMI-RECESSED SPRINKLER HEADS WITH POLISHED CHROME ESCUTCHEONS CENTERED IN ACOUSTICAL CEILING TILE. IF PENDANT HEADS ARE REQUIRED IN GWB SOFFIT OVER FRONT BAR, CONCEAL SUPPLY PIPING WITHIN SOFFIT. GENERAL CONTRACTOR TO SUBMIT SPRINKLER LAYOUT TO STARBUCKS' CONSTRUCTION MANAGER FOR APPROVAL PRIOR TO INSTALLATION.

C. LEAVE TEN (10) ADDITIONAL RETAIL CEILING TILES TO MATCH RETAIL CEILING PAINT COLOR ABOVE THE WORKROOM CEILING AT MANAGER'S DESK FOR FUTURE USE.

D. PROVIDE GROMMET AT ACOUSTIC CEILING PENETRATIONS FOR FIXTURES OF SUPPORTS.

E. HEATING, VENTILATING AND AIR CONDITIONING SHOWN ON THIS PLAN PROVIDED FOR REFERENCE ONLY. SEE MECHANICAL DRAWINGS FOR ADDITIONAL INFORMATION.

F. DIFFUSERS AND RETURNS IN ACOUSTICAL CEILING TILE TO BE CENTERED IN TILE AND PAINTED TO MATCH ADJACENT FINISHES (TYP.).

G. PAINT ALL EXPOSED HVAC DUCTS, HVAC DIFFUSERS, LIGHT TRIM RINGS, PIPING, CONDUIT AND JUNCTION BOXES THE SAME COLOR AS SPECIFIED ON SURROUNDING CEILING OR SOFFIT UNLESS OTHERWISE NOTED. TYPICAL THROUGHOUT RETAIL AREA OF STORE.

H. PAINT SUBSTITUTIONS ARE NOT ALLOWED. USE STARBUCKS' NATIONAL ACCOUNT "COLOR CODE" WHEN ORDERING PAINTS.

I. DATA CABLING ABOVE HEAD SHALL BE IN PLENUM WHEN AVAILABLE.

J. DATA CABLING AT EXPOSED CEILING SHALL BE INSTALLED IN METAL CONDUIT OR PER LOCAL CODE REQUIREMENT.

LEGEND

- EXISTING ITEM/EQUIPMENT FOR FUTURE
- EXISTING ITEM/EQUIPMENT TO BE REUSED
- EXISTING ITEM/EQUIPMENT TO REMAIN
- ADJACENT TENANT

NOTE: LEGEND IS DEPENDENT ON COLORS USED FOR COMPLETE SCOPE INFORMATION.

- ELEVATION DATUM
- TRACK LIGHTING
- STRIP LIGHTING
- PENDANT LIGHT
- RECESSED CAN LIGHT
- TROFFER
- EXIT SECURITY LIGHT
- EXIT SIGN/ EMERGENCY LIGHTING COMBO
- MUSIC SYSTEM WALL MOUNTED SPEAKER
- 360° SECURITY CAMERA
- SUPPLY AIR
- RETURN AIR
- EXHAUST FAN
- PIR MOTION SENSOR
- WALL MOUNTED SPEAKER
- WALL SCONCE AT RESTROOM
- WIFI ACCESS POINT (WAP)
- (E) 2'X2' ACT SUSPENDED CEILING SYSTEM
- (E) 2'X4' ACT SUSPENDED CEILING SYSTEM

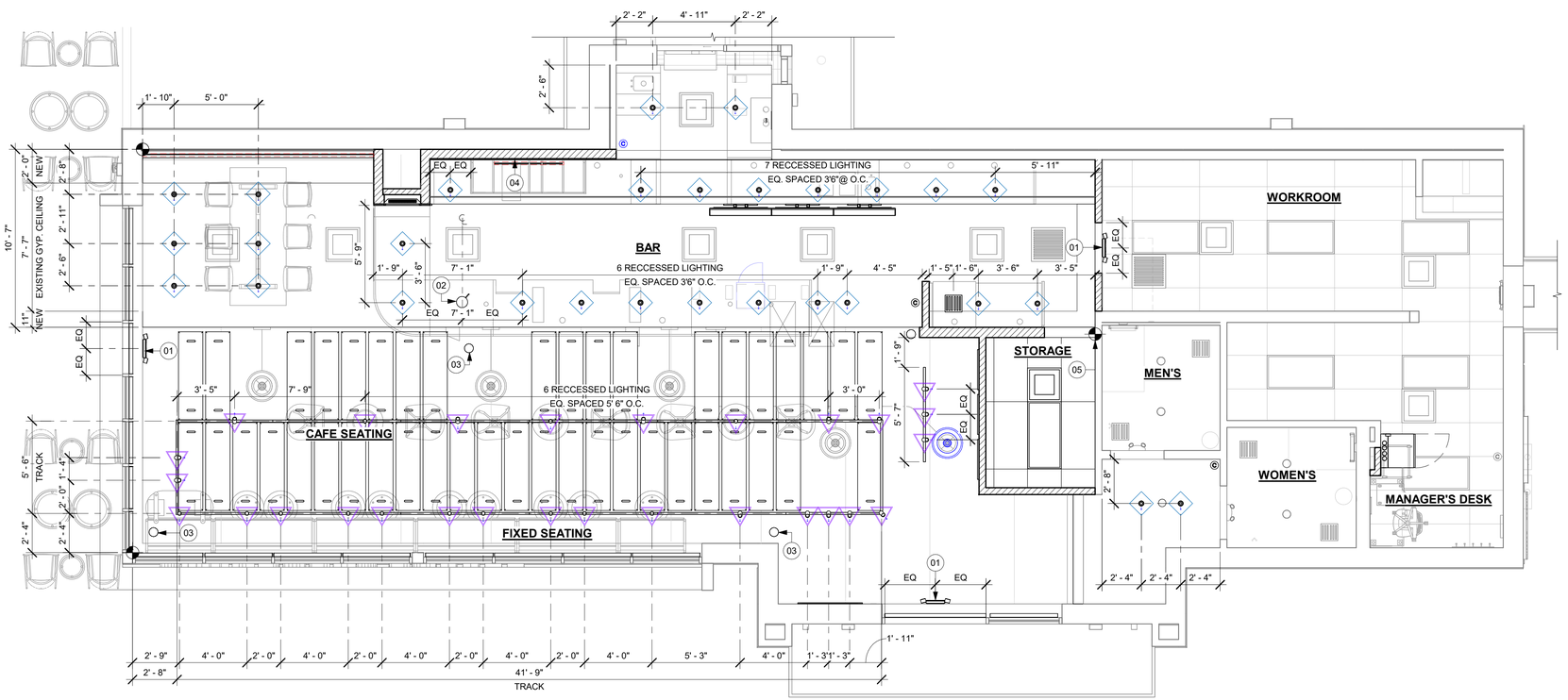

01 REFLECTED CEILING PLAN
Scale: 1/4" = 1'-0"

N

PERMIT SET - FOR CONSTRUCTION USE

© 2022 STARBUCKS COFFEE COMPANY

STARBUCKS®
2401 UTAH AVENUE SOUTH
SEATTLE, WASHINGTON 98134
(206) 318-1575

THESE DRAWINGS AND THE PROJECT MANUAL ARE CONFIDENTIAL AND SHALL REMAIN THE SOLE PROPERTY OF STARBUCKS CORPORATION, WHICH IS THE OWNER OF THE COPYRIGHT IN THIS WORK. THEY SHALL NOT BE REPRODUCED (IN WHOLE OR IN PART), SHARED WITH THIRD PARTIES OR USED IN ANY MANNER ON OTHER PROJECTS OR EXTENSIONS TO THIS PROJECT WITHOUT THE PRIOR WRITTEN CONSENT OF STARBUCKS CORPORATION. THESE DRAWINGS AND SPECIFICATIONS ARE INTENDED TO EXPRESS DESIGN INTENT FOR A PROTOTYPICAL STARBUCKS STORE (WHICH IS SUBJECT TO CHANGE AT ANYTIME) AND DO NOT REFLECT ACTUAL SITE CONDITIONS. NEITHER PARTY SHALL HAVE ANY OBLIGATION NOR LIABILITY TO THE OTHER (EXCEPT STATED ABOVE) UNTIL A WRITTEN AGREEMENT IS FULLY EXECUTED BY BOTH PARTIES.

STARBUCKS TEMPLATE VERSION: i2024.01.01

PABLO GARCIA, AIA, REG. FL NO. AR99297

Gensler

MAIN OFFICE
M. ARTHUR GENSLER JR. & ASSOCIATES
FL QUALIFIERS LIC. NO. AR99486
45 FREMONT ST, SUITE 1500
SAN FRANCISCO, CA 94105 USA
Tel (415) 433.3700
Fax (415) 836.4599

SATELLITE OFFICE
M. ARTHUR GENSLER JR. & ASSOCIATES
540 NW 26TH ST
SUITE 250
MIAMI, FL 33127 USA
Tel (305) 350.7070
Fax (305) 350.7071

PROJECT NAME: NW 43RD & 53RD

PROJECT ADDRESS: 5480 NW 43RD STREET GAINESVILLE, FL 32653

STORE #:	10820
PROJECT #:	34769-081
ISSUE DATE:	03-22-2024
DESIGN MANAGER:	ROMINA VIGNOLO
PRODUCTION DESIGNER:	GENSLER
CHECKED BY:	GENSLER

Revision Schedule

Rev	Date	By	Description

SHEET TITLE:
DIMENS. REFLECTED CEILING PLAN
SCALE: AS SHOWN

SHEET NUMBER:
I103.1

LIGHTING LEGEND

CUSTOM CAN - LED ADJUSTABLE RECESSED - 3IN 75MM - BLACK - 1155LM FLOOD WITH DIMMER	L	X0601
TRACK - LED FIXTURE WITH SNOOT - 3IN 75MM - BLACK - 1100LM FLOOD	L	21779
STRIP - LED TAPE IN HOUSING - VARIABLE LENGTH - BLACK - 350LM PER FT	L	22217
STRIP - LED TAPE IN HOUSING - VARIABLE LENGTH - BLACK - 350LM PER FT - UNDER COUNTER	L	22217
LIGHT DIRECTIONAL SYMBOL		

NOTE: LEGEND IS DEPENDENT ON COLORS USED FOR COMPLETE SCOPE INFORMATION.

GENERAL NOTES

A. REFERENCE LOW VOLTAGE PLAN SHEET AND ELECTRICAL DRAWINGS.

B. IF REQUIRED BY LOCAL CODE, GENERAL CONTRACTOR TO PROVIDE SEMI-RECESSED SPRINKLER HEADS WITH POLISHED CHROME ESCUTCHEONS CENTERED IN ACOUSTICAL CEILING TILE. IF PENDANT HEADS ARE REQUIRED IN GWB SOFFIT OVER FRONT BAR, CONCEAL SUPPLY PIPING WITHIN SOFFIT. GENERAL CONTRACTOR TO SUBMIT SPRINKLER LAYOUT TO STARBUCKS' CONSTRUCTION MANAGER FOR APPROVAL PRIOR TO INSTALLATION.

C. LEAVE TEN (10) ADDITIONAL RETAIL CEILING TILES TO MATCH RETAIL CEILING PAINT COLOR ABOVE THE WORKROOM CEILING AT MANAGER'S DESK FOR FUTURE USE.

D. PROVIDE GROMMET AT ACOUSTIC CEILING PENETRATIONS FOR FIXTURES OF SUPPORTS.

E. HEATING, VENTILATING AND AIR CONDITIONING SHOWN ON THIS PLAN PROVIDED FOR REFERENCE ONLY. SEE MECHANICAL DRAWINGS FOR ADDITIONAL INFORMATION.

F. DIFFUSERS AND RETURNS IN ACOUSTICAL CEILING TILE TO BE CENTERED IN TILE AND PAINTED TO MATCH ADJACENT FINISHES (TYP.).

G. PAINT ALL EXPOSED HVAC DUCTS, HVAC DIFFUSERS, LIGHT TRIM RINGS, PIPING, CONDUIT AND JUNCTION BOXES THE SAME COLOR AS SPECIFIED ON SURROUNDING CEILING OR SOFFIT UNLESS OTHERWISE NOTED. TYPICAL THROUGHOUT RETAIL AREA OF STORE.

H. PAINT SUBSTITUTIONS ARE NOT ALLOWED. USE STARBUCKS' NATIONAL ACCOUNT "COLOR CODE" WHEN ORDERING PAINTS.

I. DATA CABLING ABOVE HEAD SHALL BE IN PLENUM WHEN AVAILABLE.

J. DATA CABLING AT EXPOSED CEILING SHALL BE INSTALLED IN METAL CONDUIT OR PER LOCAL CODE REQUIREMENT.

LEGEND

- EXISTING ITEM/EQUIPMENT FOR FUTURE
- EXISTING ITEM/EQUIPMENT TO BE REUSED
- EXISTING ITEM/EQUIPMENT TO REMAIN
- ADJACENT TENANT

NOTE: LEGEND IS DEPENDENT ON COLORS USED FOR COMPLETE SCOPE INFORMATION.

- ELEVATION DATUM
- TRACK LIGHTING
- STRIP LIGHTING
- PENDANT LIGHT
- RECESSED CAN LIGHT
- TROFFER
- EXIT SECURITY LIGHT
- EXIT SIGN/ EMERGENCY LIGHTING COMBO
- MUSIC SYSTEM WALL MOUNTED SPEAKER
- 360° SECURITY CAMERA
- SUPPLY AIR
- RETURN AIR
- EXHAUST FAN
- PIR MOTION SENSOR
- WALL MOUNTED SPEAKER
- WALL SCONCE AT RESTROOM
- WIFI ACCESS POINT (WAP)
- (E) 2'X2' ACT SUSPENDED CEILING SYSTEM
- (E) 2'X4' ACT SUSPENDED CEILING SYSTEM

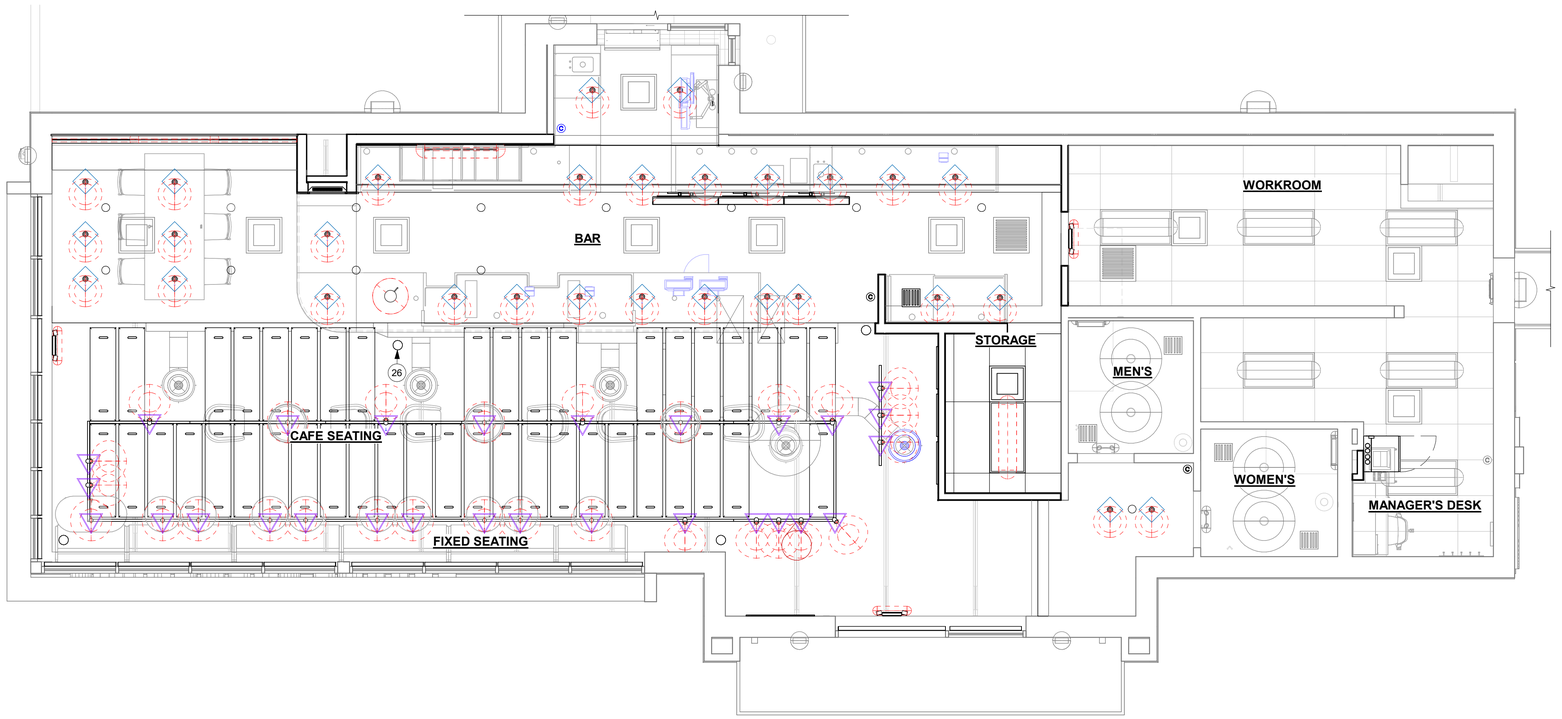

01 REFLECTED CEILING PLAN
Scale: 1/4" = 1'-0"

PERMIT SET - FOR CONSTRUCTION USE

© 2022 STARBUCKS COFFEE COMPANY

STARBUCKS®
2401 UTAH AVENUE SOUTH
SEATTLE, WASHINGTON 98134
(206) 318-1575

THESE DRAWINGS AND THE PROJECT MANUAL ARE CONFIDENTIAL AND SHALL REMAIN THE SOLE PROPERTY OF STARBUCKS CORPORATION, WHICH IS THE OWNER OF THE COPYRIGHT IN THIS WORK. THEY SHALL NOT BE REPRODUCED (IN WHOLE OR IN PART), SHARED WITH THIRD PARTIES OR USED IN ANY MANNER ON OTHER PROJECTS OR EXTENSIONS TO THIS PROJECT WITHOUT THE PRIOR WRITTEN CONSENT OF STARBUCKS CORPORATION. THESE DRAWINGS AND SPECIFICATIONS ARE INTENDED TO EXPRESS DESIGN INTENT FOR A PROTOTYPICAL STARBUCKS STORE (WHICH IS SUBJECT TO CHANGE AT ANYTIME) AND DO NOT REFLECT ACTUAL SITE CONDITIONS. NEITHER PARTY SHALL HAVE ANY OBLIGATION NOR LIABILITY TO THE OTHER (EXCEPT STATED ABOVE) UNTIL A WRITTEN AGREEMENT IS FULLY EXECUTED BY BOTH PARTIES.

STARBUCKS TEMPLATE VERSION: i2024.01.01

PABLO GARCIA, AIA, REG. FL NO. AR99297

Gensler

MAIN OFFICE
M. ARTHUR GENSLER JR. & ASSOCIATES
FL QUALIFIER'S LIC. NO. AR96486
43 FREMONT ST, SUITE 1500
SAN FRANCISCO, CA 94105 USA
Tel (415) 433.3700
Fax (415) 836.4599

SATELLITE OFFICE
M. ARTHUR GENSLER JR. & ASSOCIATES
545 NW 26TH ST
SUITE 250
MIAMI, FL 33127 USA
Tel (305) 350.7070
Fax (305) 350.7071

PROJECT NAME:
NW 43RD & 53RD

PROJECT ADDRESS:
5480 NW 43RD STREET
GAINESVILLE, FL 32653

STORE #:	10820
PROJECT #:	34769-081
ISSUE DATE:	03-22-2024
DESIGN MANAGER:	ROMINA VIGNOLO
PRODUCTION DESIGNER:	GENSLER
CHECKED BY:	GENSLER

Revision Schedule

Rev	Date	By	Description

SHEET TITLE:
REFLECTED CEILING PLAN REFERENCE
SCALE: AS SHOWN

SHEET NUMBER:
I103.2

FLOOR TREATMENT SCHEDULE - "T"

DESIGN ID	AREA	DESCRIPTION	FURN. BY	INST. BY	COMMENTS
PLASTIC					
19795	887 SF	POLYVINYL FLOOR TILE - ECO-GRIP - PEWTER	GC	GC	GC TO PROCURE FROM ALLIED INDUSTRIES
TILE					
20228	1100 SF	TILE - I COCCI - CEMENTO - 24X24IN 600X600MM	SB	GC	GROUT: MAPEI - 47 CHARCOAL, OR EQUAL
WALK OFF MAT					
19288	35 SF	WALK OFF MAT - HELIX Z1 - BLACK - 12X9IN 305X230MM	SB	GC	

WALL BASE SCHEDULE - "B"

DESIGN ID	LENGTH	DESCRIPTION	FURN. BY	INST. BY	COMMENTS
METAL BASE					
X1301	37' - 4 1/4"	METAL BASE - BLACK MT0028 - 6IN 150MM	GC	GC	W/ SANITARY 1/2IN COVE BEND 45-DEGREE. PROVIDED BY CASEWORK VENDOR.
TILE BASE					
11403	51' - 9 1/4"	TILE BASE - BLACK - 6X12IN 150X300MM	SB	GC	GROUT GR0008: MAPEI 10 - BLACK; LATICRETE 45 - RAVEN; PRETOKOLL - P.FLEX PRETO
18740	82' - 10"	TILE BASE - PLAZA NOVA - BLACK SHADOW - 6X12IN 150X300MM	SB	GC	W/ BULLNOSE SANITARY 3/8IN COVE BASE MOLDING. GROUT: MAPEI - 10 BLACK, OR EQUAL.
19795	217' - 10 1/4"	POLYVINYL FLOOR TILE - ECOGRIP - PEWTER	GC	GC	
TRANSITION BASE					
X1302	33' - 9"	TAPERED ALUMINIUM FRAME - 16 GA	GC	GC	FINISH: DARK ANTHRACITE

KEYED NOTES

01 PROPOSED LOCATION OF CASEWORK DIEWALL. GC TO COORDINATE WITH CASEWORK VENDOR FOR LOCATION ON SITE.
02 OUTLINE OF ENGINE FOR REFERENCE.
03 OUTLINE OF BANQUETTE SEATING FOR REFERENCE.
04 RECESSED WALK-OFF MAT AT ENTRY. CUT OUT CONCRETE AS REQUIRED PER MANUFACTURER'S SPECIFICATIONS. SEE INTERIOR DETAIL SHEETS FOR TRANSITION.
05 TILE START POINT WHERE INDICATED IN PLAN.
06 INSTALL TILE FLOORING AT CAFE, RESTROOM VESTIBULE, RESTROOMS AND MANAGER'S OFFICE AS INDICATED IN PLAN.
07 INSTALL CUSTOM METAL ALUMINUM TRIM AROUND WALK-OFF MAT AS INDICATED IN PLAN AND DETAIL.
08 INSTALL POLYVINYL FLOORING AND BASE AT BACKBAR, AND WORKROOM.
09 POLYVINYL START POINT WHERE INDICATED.
10 INSTALL TILE BASE AT CAFE, RESTROOM VESTIBULE AND PARTNER'S AREA AS INDICATED IN PLAN.
11 DUPLEX FLOOR OUTLET. COORDINATE FLOOR RECEPTACLE.
12 EXISTING DRAIN LOCATION TO REMAIN. GC TO PROTECT DURING CONSTRUCTION.

GENERAL NOTES

A. WORKROOM TO BE FINISHED PER LOCAL CODE REQUIREMENTS.

B. FLOORS, WALLS AND CEILING FINISHES IN FOOD PREPARATION AREAS SHALL BE SMOOTH, NON-TOXIC, NON-ABSORBENT, DURABLE AND EASILY CLEANABLE. PAINT SHALL BE WASHABLE; SEMI-GLOSS OR HIGH-GLOSS FINISH.

C. STARBUCKS TO SUPPLY FLOORING AND BASE FOR FRONT AND BACK OF HOUSE AS NOTED IN SCHEDULES. GENERAL CONTRACTOR TO INSTALL. GENERAL CONTRACTOR TO SUPPLY WORKROOM TILE AND BASE AND INSTALL. GENERAL CONTRACTOR TO SUPPLY AND INSTALL MORTAR, ADHESIVE, AND GROUT. GENERAL CONTRACTOR TO INSPECT ALL TILES AND REJECT DAMAGED OR SUBSTANDARD TILES PRIOR TO INSTALLATION.

D. ALIGN TILE TRANSITIONS ON WHOLE TILES AS SHOWN.

E. ALL FLOOR AND WALL JUNCTIONS IN STORAGE AND FOOD PREPARATION AREAS SHALL HAVE A 6" COVED BASE.

F. SEE BUILDING FLOOR PENETRATION PLAN ON SHEET A102 AND PLUMBING FOR ADDITIONAL INFORMATION.

LEGEND

- WALK OFF MAT - HELIX Z1 - BLACK - 12X9IN 305X230MM — T 19288
- POLYVINYL FLOOR - ECOGRIP - PEWTER - 60X96IN 1524X2438MM — T 19795
- TILE - I COCCI - CEMENTO - 24X24IN 600X600MM — T 20228
- (A) TILE BASE - PLAZA NOVA - BLACK SHADOW - 6X12IN 150X300MM — B 18740
- (B) POLYVINYL FLOOR - ECOGRIP - PEWTER - 60X96IN 1524X2438MM — B 19795
- (C) TILE BASE - NERO - 6X12IN 150X300MM — B X1300
- (D) METAL BASE - POWERCOATED FLAT BLACK - MT0028 - 6IN 150MM — B X1301
- DATUM POINT
- FLOOR DRAIN
- FLOOR CLEAN-OUT
- FLOOR SINK

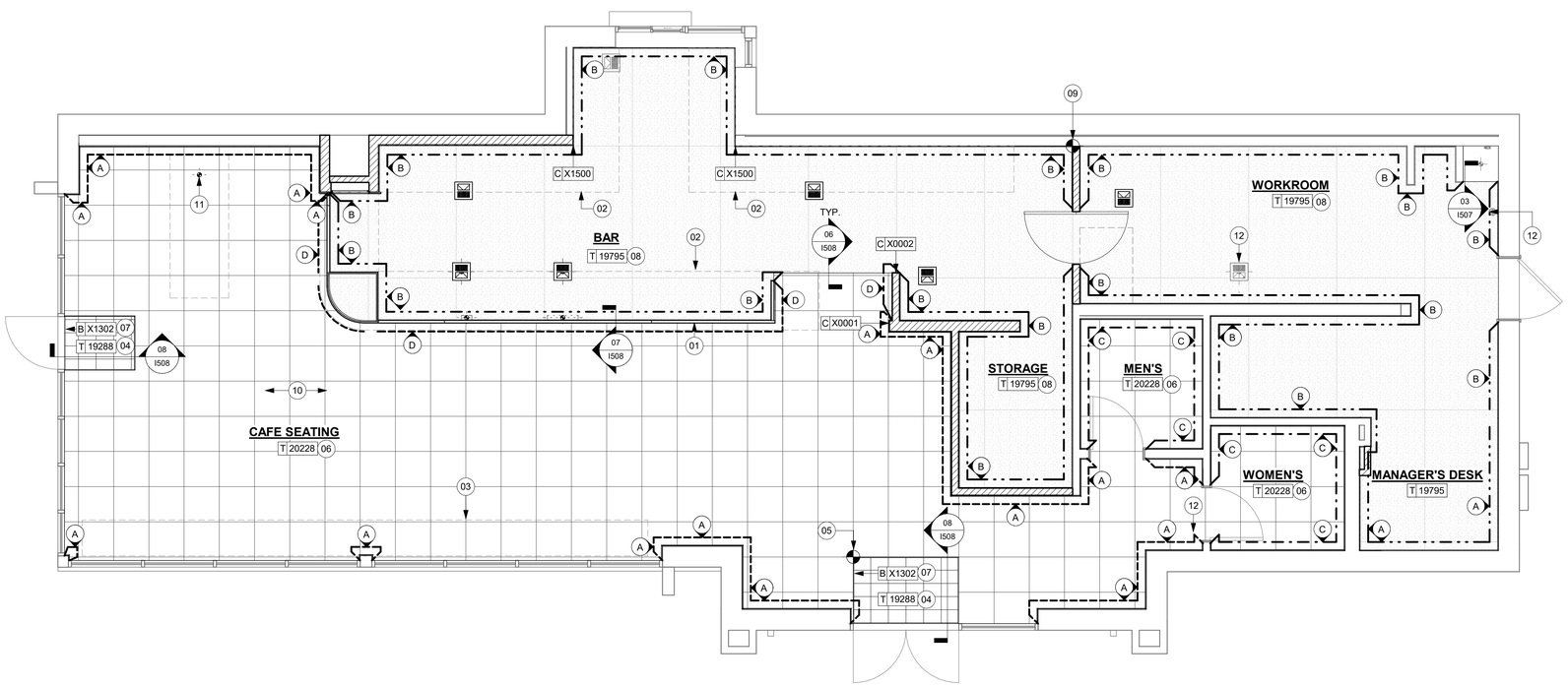

01 FLOOR FINISH PLAN
Scale: 1/4" = 1'-0"

PERMIT SET - FOR CONSTRUCTION USE

© 2022 STARBUCKS COFFEE COMPANY

STARBUCKS®
2401 UTAH AVENUE SOUTH
SEATTLE, WASHINGTON 98134
(206) 318-1575

THESE DRAWINGS AND THE PROJECT MANUAL ARE CONFIDENTIAL AND SHALL REMAIN THE SOLE PROPERTY OF STARBUCKS CORPORATION, WHICH IS THE OWNER OF THE COPYRIGHT IN THIS WORK. THEY SHALL NOT BE REPRODUCED (IN WHOLE OR IN PART), SHARED WITH THIRD PARTIES OR USED IN ANY MANNER ON OTHER PROJECTS OR EXTENSIONS TO THIS PROJECT WITHOUT THE PRIOR WRITTEN CONSENT OF STARBUCKS CORPORATION. THESE DRAWINGS AND SPECIFICATIONS ARE INTENDED TO EXPRESS DESIGN INTENT FOR A PROTOTYPICAL STARBUCKS STORE (WHICH IS SUBJECT TO CHANGE AT ANYTIME) AND DO NOT REFLECT ACTUAL SITE CONDITIONS. NEITHER PARTY SHALL HAVE ANY OBLIGATION NOR LIABILITY TO THE OTHER (EXCEPT STATED ABOVE) UNTIL A WRITTEN AGREEMENT IS FULLY EXECUTED BY BOTH PARTIES.

STARBUCKS TEMPLATE VERSION: i2024.01.01

PABLO GARCIA, AIA, REG. FL NO. AR99297

Gensler

MAIN OFFICE
M. ARTHUR GENSLER JR. & ASSOCIATES
FL QUALIFIER'S LIC. NO. AR96486
45 FREMONT ST, SUITE 1500
SAN FRANCISCO, CA 94105 USA
Tel (415) 433.3700
Fax (415) 836.4599

SATELLITE OFFICE
M. ARTHUR GENSLER JR. & ASSOCIATES
545 NW 26TH ST
SUITE 250
MIAMI, FL 33127 USA
Tel (305) 350.7070
Fax (305) 350.7071

PROJECT NAME:
NW 43RD & 53RD

PROJECT ADDRESS:
5480 NW 43RD STREET
GAINESVILLE, FL 32653

STORE #:	10820
PROJECT #:	34769-081
ISSUE DATE:	03-22-2024
DESIGN MANAGER:	ROMINA VIGNOLO
PRODUCTION DESIGNER:	GENSLER
CHECKED BY:	GENSLER

Revision Schedule

Rev	Date	By	Description

SHEET TITLE:
FLOOR FINISH PLAN

SCALE: AS SHOWN

SHEET NUMBER:
I104

WALL TREATMENT (AREA) SCHEDULE - "Q"

DESIGN ID	AREA	DESCRIPTION	FURN. BY	INST. BY	COMMENTS
OTHER					
X1100	16 SF	GWB CEILING WITH LEVEL 4 FINISH - PAINT AS SCHEDULED	GC	GC	FINISH: REFER TO RCP PLAN AT I103 FOR TONE TAG; INSTALLATION SHALL BE IN STRICT ACCORDANCE W/ MANUFACTURER'S INSTRUCTIONS.
TILE					
X1400	516 SF	TILE - ALTAMIRA - VANILLA - SATIN FINISH	SB	GC	GROUT: MAPEI - 105 DRIFTWOOD, 3/16IN THICKNESS. VENDOR: FIVE STAR CERAMICS GROUP. CONTACT INFO: CHRIS MACHADO CHRISM@FIVESCG.COM, LONG LEAD ITEM 10-12 WEEKS EXPECTED.
WALL COVERING					
17854	221 SF	WALL COVERING - TADAO - STARBUCKS WG11184374	SB	GC	
20623	15 SF	WALL COVERING - BURLAP - RETREAT	SB	GC	
23764	1019 SF	POLYWALL WALL COVERING - MATTE WHITE	GC	CG	
WOOD					
X1401	34 SF	WOOD - WHITE OAK - FULL PLANK - SELECTED GRAIN - VERTICAL	SB	GC	TO BE PROVIDED BY CASEWORK VENDOR

WALL TREATMENT (LENGTH) SCHEDULE - "R"

DESIGN ID	LENGTH	DESCRIPTION	FURN. BY	INST. BY	COMMENTS
METAL BASE					
X1301	37' - 4 1/4"	METAL BASE - BLACK MT0028 - 6IN 150MM	GC	GC	W/ SANITARY 1/2IN COVE BEND 45-DEGREE. PROVIDED BY CASEWORK VENDOR.
TILE BASE					
11403	51' - 9 1/4"	TILE BASE - BLACK - 6X12IN 150X300MM	SB	GC	GROUT GR0008: MAPEI 10 - BLACK; LATICRETE 45 - RAVEN; PRETOKOLL - P.FLEX PRETO
18740	82' - 10"	TILE BASE - PLAZA NOVA - BLACK SHADOW - 6X12IN 150X300MM	SB	GC	W/ BULLNOSE SANITARY 3/8IN COVE BASE MOLDING. GROUT: MAPEI - 10 BLACK, OR EQUAL.
19795	217' - 10 1/4"	POLYVINYL FLOOR TILE - ECOGRIP - PEWTER	GC	GC	
TRANSITION BASE					
X1302	33' - 9"	TAPERED ALUMINIUM FRAME - 16 GA	GC	GC	FINISH: DARK ANTHRACITE

PAINT SCHEDULE

DESIGN ID	DESCRIPTION	LRV	FURN. BY	INST. BY	COMMENTS
20438	SW7020 BLACK FOX, OR EQUIVALENT	7	GC	GC	SW USE PRIMER CP-1; NCS - S 7502-Y; AKZO NOBEL - 30YY 10/038
20456	SW7631 CITY LOFT, OR EQUIVALENT	70	GC	GC	SW USE PRIMER CP-1; NCS - S 2002-Y50R; AKZO NOBEL - 40YY 73/028
X0300	SW7037 BALANCED BEIGE, OR EQUIVALENT	48	GC	GC	SW USE PRIMER CP-1; NCS - S 2002-Y50R; AKZO NOBEL - 40YY 73/028
X0301	SW7039 VIRTUAL TAUPE, OR EQUIVALENT	20	GC	GC	SW USE PRIMER CP-1; NCS - S 2002-Y50R; AKZO NOBEL - 40YY 73/028

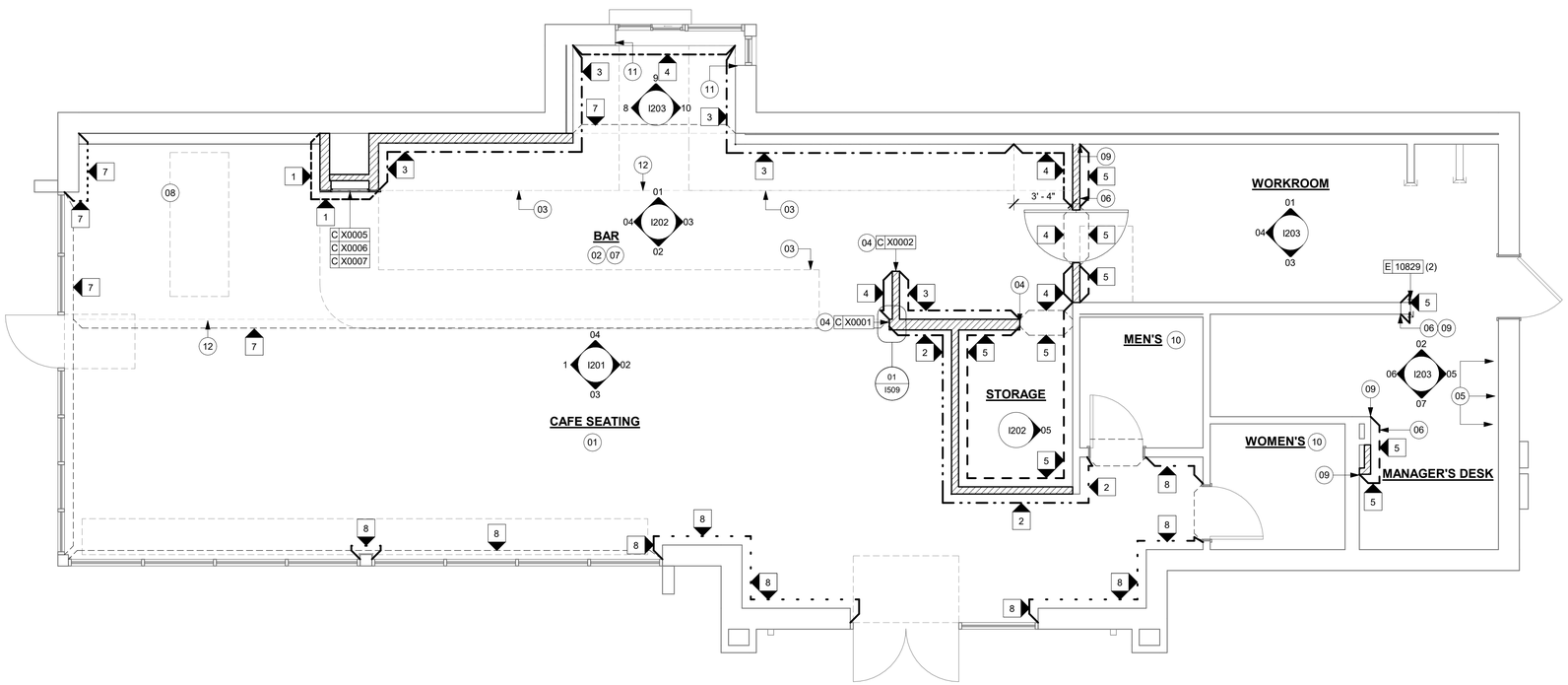

01 WALL FINISH PLAN
Scale: 1/4" = 1'-0"

KEYED NOTES

01 REFER TO INTERIOR ELEVATIONS FOR PAINT COLORS AND TRANSITIONS.
02 GC TO FURNISH AND INSTALL POLYWALL BELOW ENGINE EXPOSED WALLS, EXCEPT AT WARMING WALL. EXTEND FROM WALL BASE TO UNDERSIDE OF COUNTERTOP. SEAL AT BASE. WALL TILE TO START ABOVE THE BACKSPLASH. REFER TO INTERIOR ELEVATIONS FOR ADDITIONAL INFORMATION AND START POINTS.
03 OUTLINE OF ENGINE FOR REFERENCE.
04 METAL MILLWORK TRANSITION. REFER TO I102.
05 RECESSED ELECTRICAL PANELS BY LL.
06 INSTALL FULL HEIGHT POLYWALL PANELING AT WORKROOM AND STORAGE WALLS AS INDICATED.
07 GC TO INSTALL BACKBAR WALL TILE AS INDICATED ON INTERIOR FINISH ELEVATIONS.
08 WALL BASE CURB. REFER TO I507.
09 FOR SEAM JOINTS, SLIDE DIVISION MOLDING UNDER EDGE OF FIRST PANEL.
10 EXISTING WALL FINISHES TO REMAIN. GC TO CLEAN, PATCH AND REPAIR TO ACHIEVE LIKE-NEW CONDITION.
11 BACKBAR TILE TO RETURN TO MULLIONS WITHIN DRIVE-THRU WINDOW OPENING AS INDICATED.
12 SOFFIT ABOVE FOR REFERENCE.

GENERAL NOTES

A. GC TO PATCH AND REPAIR ANY DAMAGE TO EXISTING WALLS TO A SMOOTH, PAINT READY SURFACE PRIOR TO PAINTING.

B. CHANGE OF PAINT COLOR ALLOWED ONLY AT INSIDE CORNERS, UNLESS OTHERWISE NOTED.

C. PAINT SUBSTITUTIONS ARE NOT ALLOWED. USE STARBUCKS NATIONAL SHERWIN-WILLIAMS ACCOUNT "COLOR CODE" WHEN ORDERING PAINTS.

D. REFER TO INTERIOR ELEVATIONS FOR PAINT COLORS AND GRAPHICS' LOCATIONS.

E. WALL AND CEILING COVERING MATERIALS SHALL BE ATTACHED SO THAT THEY ARE EASILY CLEANABLE.

F. MATERIALS FOR INDOOR WALL SURFACES FOR CONDITIONS OF NORMAL USE SHALL BE SMOOTH, DURABLE, AND EASILY CLEANABLE.

G. GC TO PROVIDE AND INSTALL WORKROOM WALL FINISHES PER LOCAL CODE REQUIREMENTS.

H. FLOORS, WALLS AND CEILING FINISHES IN FOOD PREPARATION AREAS SHALL BE SMOOTH, NON-TOXIC, NON-ABSORBENT, DURABLE AND EASILY CLEANABLE.

I. PAINT SHALL BE WASHABLE; SEMI-GLOSS OR HIGH-GLOSS FINISH.

J. PAINT FINISHES SHALL BE APPLIED AS FOLLOWS, UNLESS NOTED OTHERWISE:

1. WOODS AND METAL SURFACES SHALL BE SEMI-GLOSS OR EQUAL.
2. ACCENT AND TRIM PAINTS TO BE SEMI-GLOSS OR EQUAL.
3. WALL AND CEILING PAINTS TO BE EGGSHELL OR EQUAL.
4. PAINTS IN BOH, RESTROOM(S) OR CAFE BAR SHALL BE SEMI-GLOSS OR EQUAL.

K. ALL WOOD SURFACES (DOORS, TRIM, SHELVES, CABINETRY) SHALL BE SEALED.

L. REFER TO CASEWORK FINISH SCHEDULE FOR CASEWORK FINISH MATERIAL INFORMATION.

M. REFER TO INTERIOR FINISH ELEVATIONS FOR ARTWORK/ GRAPHICS LOCATIONS. REFER TO MANUFACTURER'S INSTRUCTIONS INCLUDED WITH ARTWORK/GRAPHICS FOR PROPER INSTALLATION.

N. ALL FLOOR AND WALL JUNCTIONS IN STORAGE AND FOOD PREPARATION AREAS SHALL HAVE 6" COVED BASE.

O. INSTALL BLOCKING AND HANGERS FOR WALL SHELVING BEFORE INSTALLING BACK BAR TILE.

P. CV SHOULD PROVIDE WOOD CLEAR SHERWIN WILLIAMS "CLASS A VARNISH SYSTEM" FLAMES SPREAD RETARDANT FOR ALL WOOD ITEMS OR "CLASS A" EQUIVALENT. APPLY PER MFR'S RECOMMENDATIONS ON ALL SIDES OF PANELS PRIOR TO SEALER. GC TO TEST PRIOR TO INSTALLATION.

Q. PROVIDE FIRE TREATED BLOCKING AS REQUIRED TO SUPPORT WALL ATTACHMENTS (SEE BUILDING FLOOR PLAN ON SHEET A-101 FOR MORE INFORMATION).

R. REFER TO SHEET I-502 FOR WALL FINISH DETAILS.

LEGEND

EXISTING WALL TO REMAIN

NEW FULL HEIGHT WALL

C X0004 / WD0073 — 1 — WOOD CLADDING TO CEILING

Q 17854 — 2 — WALL COVERING TO 10'-5"

Q 23764 / Q X1400 — 3 — POLYWALL PANELING TO 2'-10" AFF WALL TILE TO CEILING

Q X1400 — 4 — WALL TILE TO CEILING

Q 23764 — 5 — POLYWALL PANELING

P X0300 / P 20438 — 7 — PAINT TO 11'-5" AFF PAINT TO CEILING

P X0301 / P 20438 — 8 — PAINT TO 11'-5" AFF PAINT TO CEILING

INDICATES APPLY WALL FINISH ABOVE THE DOOR SILL AS INDICATED. REFER TO ELEVATIONS.

SEE INTERIOR FINISH ELEVATIONS FOR TAGGED LOCATION OF WALL FINISH MATERIAL

PERMIT SET - FOR CONSTRUCTION USE

© 2022 STARBUCKS COFFEE COMPANY

STARBUCKS®
2401 UTAH AVENUE SOUTH
SEATTLE, WASHINGTON 98134
(206) 318-1575

THESE DRAWINGS AND THE PROJECT MANUAL ARE CONFIDENTIAL AND SHALL REMAIN THE SOLE PROPERTY OF STARBUCKS CORPORATION, WHICH IS THE OWNER OF THE COPYRIGHT IN THIS WORK. THEY SHALL NOT BE REPRODUCED (IN WHOLE OR IN PART), SHARED WITH THIRD PARTIES OR USED IN ANY MANNER ON OTHER PROJECTS OR EXTENSIONS TO THIS PROJECT WITHOUT THE PRIOR WRITTEN CONSENT OF STARBUCKS CORPORATION. THESE DRAWINGS AND SPECIFICATIONS ARE INTENDED TO EXPRESS DESIGN INTENT FOR A PROTOTYPICAL STARBUCKS STORE (WHICH IS SUBJECT TO CHANGE AT ANYTIME) AND DO NOT REFLECT ACTUAL SITE CONDITIONS. NEITHER PARTY SHALL HAVE ANY OBLIGATION NOR LIABILITY TO THE OTHER (EXCEPT STATED ABOVE) UNTIL A WRITTEN AGREEMENT IS FULLY EXECUTED BY BOTH PARTIES.

STARBUCKS TEMPLATE VERSION: i2024.01.01

PABLO GARCIA, AIA, REG. FL NO. AR99297

Gensler
MAIN OFFICE
M. ARTHUR GENSLER JR. & ASSOCIATES
FL QUALIFIER'S LIC. NO. AR96486
45 FREMONT ST., SUITE 1500
SAN FRANCISCO, CA 94105 USA
Tel (415) 433.3700
Fax (415) 836.4599

SATELLITE OFFICE
M. ARTHUR GENSLER JR. & ASSOCIATES
545 NW 26TH ST
SUITE 250
MIAMI, FL 33127 USA
Tel (305) 350.7070
Fax (305) 350.7071

PROJECT NAME:
NW 43RD & 53RD

PROJECT ADDRESS:
5480 NW 43RD STREET
GAINESVILLE, FL 32653

STORE #: 10820
PROJECT #: 34769-081
ISSUE DATE: 03-22-2024
DESIGN MANAGER: ROMINA VIGNOLO
PRODUCTION DESIGNER: GENSLER
CHECKED BY: GENSLER

Revision Schedule

Rev	Date	By	Description

SHEET TITLE:
WALL FINISH PLAN

SCALE: AS SHOWN

SHEET NUMBER:
I105

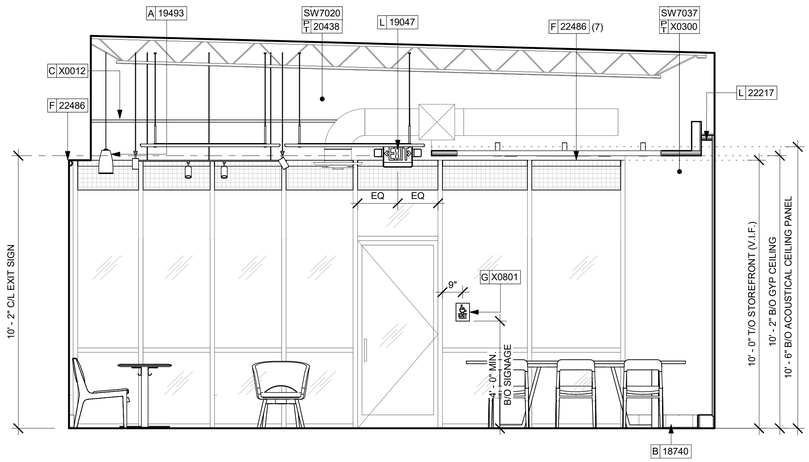

1 CAFE ELEVATION TOWARDS SECONDARY EXIT

Scale: 3/8" = 1'-0"

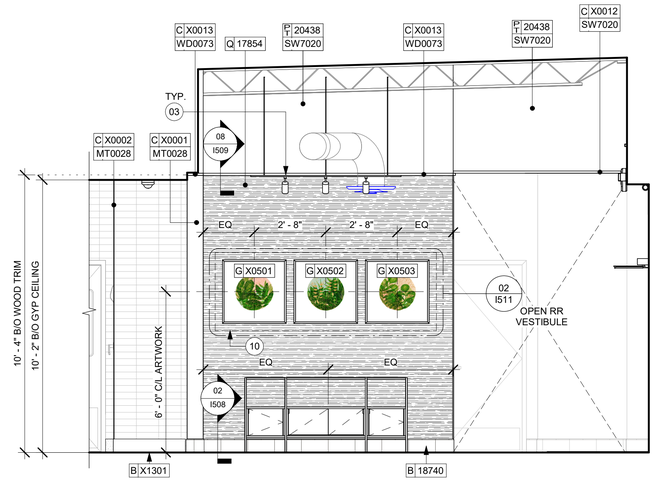

02 ELEVATION - MERCH AND ARTWORK

Scale: 3/8" = 1'-0"

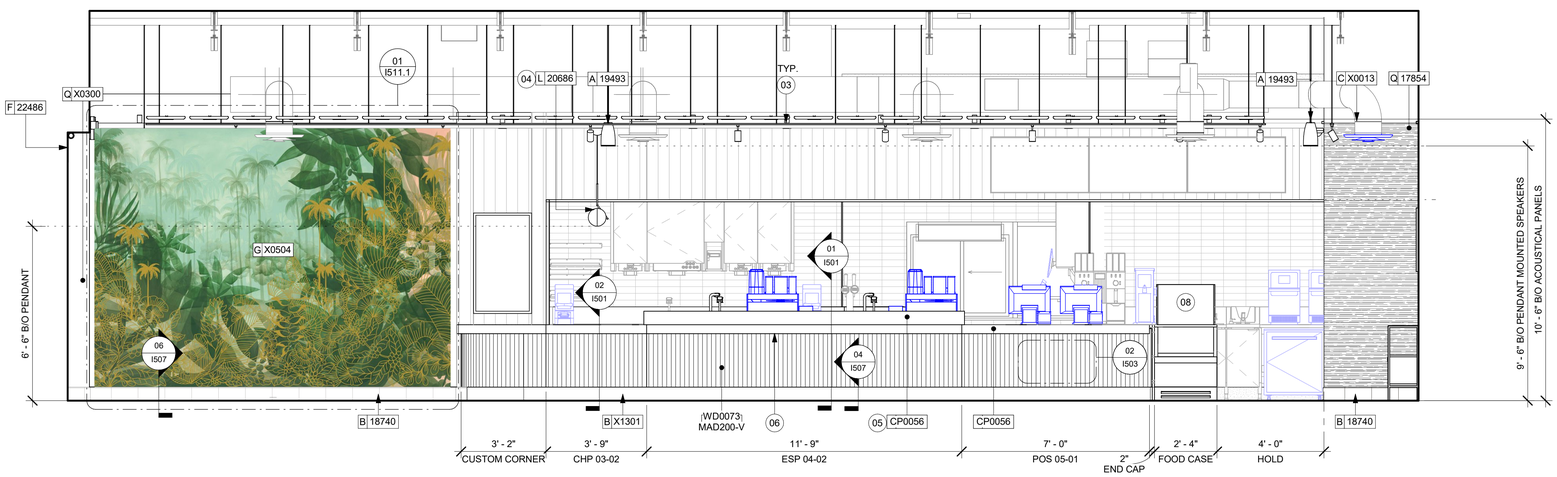

04 ELEVATION ENGINE - FRONT BAR COSTUMER'S VIEW

Scale: 3/8" = 1'-0"

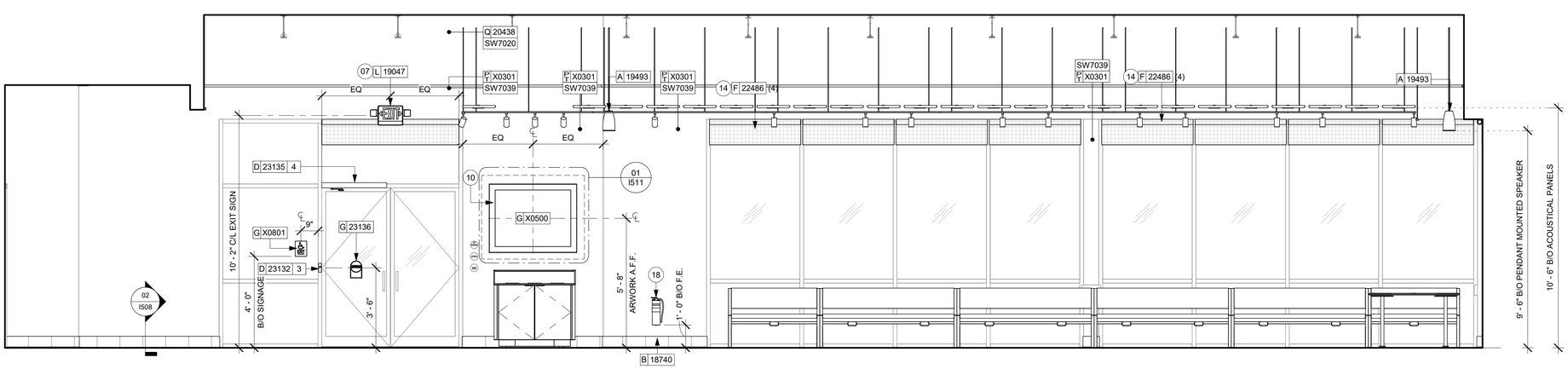

03 ELEVATION - SEATING AREA

Scale: 3/8" = 1'-0"

KEYED NOTES

03 LIGHT FIXTURE (SEE REFLECTED CEILING PLAN ON SHEET I103 AND LIGHTING PLAN ON SHEET E102 FOR ADDITIONAL INFORMATION).

04 CEILING MOUNTED MOP (MOBILE ORDER AND PAY) INSTALL AS INDICATED. REFER TO DETAILS FOR ADDITIONAL INFORMATION AND SCHEDULE FOR SPECIFICATIONS.

05 CORIAN SHROUD.

06 INSTALL UNDERCOUNTER LED LIGHTING AT FRONT BAR AS INDICATED. REFER TO SCHEDULE FOR SPECIFICATIONS AND ELECTRICAL SHEETS FOR ADDITIONAL INFORMATION.

07 WALL MOUNTED EMERGENCY LIGH FIXTURE.

08 DO NOT BLOCK FOOD CASE INTAKE/EXHAUST.

09 STARTING POINT FOR TILE INSTALLATION. START WITH FULL TILE ON TOP. WALL TILE GROUT LINES TO ALIGN AS INDICATED. EXCESS TILE TO BE CUT TO ALIGN.

10 IN-WALL WOOD BLOCKING. VERIFY BLOCKING LOCATION, EXTENTS AND BLOCKING WITH MANUFACTURER'S REQUIREMENTS.

14 INSTALL ROLLER SHADE AS SHOWN.

18 (E) PLACE FIRE EXTINGUISHER PER LOCAL FIRE CODE REQUIREMENTS. COORDINATE TYPE AND SIZE WITH LOCAL INSPECTOR.

GENERAL NOTES

A. FOR GRAPHICS SCHEDULE, REFER TO THE FURNITURE, FIXTURES, AND EQUIPMENT (FF & E) SCHEDULES ON SHEET I601.

B. REFER TO MANUFACTURER'S INSTRUCTIONS INCLUDED WITH ARTWORK/GRAPHICS FOR PROPER INSTALLATION.

C. CHANGE PAINT COLOR ONLY AT INSIDE CORNERS UNLESS OTHERWISE INDICATED.

D. PAINT FINISHES SHALL BE APPLIED AS FOLLOWS, UNLESS NOTED OTHERWISE:
   a. WOODS AND METAL SURFACES SHALL BE SEMI-GLOSS OR EQUAL.
   b. ACCENT AND TRIM PAINTS TO BE SEMI-GLOSS OR EQUAL.
   c. WALL AND CEILING PAINTS TO BE EGGSHELL OR EQUAL.
   d. PAINTS IN BOH, RESTROOM(S) OR CAFE BAR SHALL BE SEMI-GLOSS OR EQUAL.

E. PAINT SUBSTITUTIONS ARE NOT ALLOWED. USE STARBUCKS NATIONAL ACCOUNT COLOR CODE WHEN ORDERING PAINTS.

F. FLOORS, WALLS AND CEILING FINISHES IN FOOD PREPARATION AREAS SHALL BE SMOOTH, NON-TOXIC, NON-ABSORBENT, DURABLE AND EASILY CLEANABLE. PAINT SHALL BE WASHABLE; SEMI-GLOSS OR HIGH GLOSS FINISH.

G. ALL WOOD SURFACES (DOORS, TRIM, SHELVES, CABINETRY) SHALL BE SEALED.

H. REFER TO CASEWORK FINISH SCHEDULE ON THE CASEWORK FINISH PLAN ON SHEET I102 FOR CASEWORK FINISH MATERIAL INFORMATION.

I. ALIGN TILE TRANSITIONS ON WHOLE TILES AS SHOWN.

J. ALL FLOOR AND WALL JUNCTIONS IN STORAGE AND FOOD PREPARATION AREAS SHALL HAVE A 6" COVED BASE.

K. ALL FOOD STORAGE SHALL BE 6" (150MM) A.F.F.

L. INSTALL BLOCKING AND HANGERS FOR WALL SHELVING BEFORE INSTALLING BACK BAR TILE.

M. GENERAL CONTRACTOR TO PROVIDE AND INSTALL WORKROOM WALL FINISHES.

N. CLASS A FIRE RETARDANT TREATMENT (PER ASTM E 84), OR PASSES NFPA 286 (DID: SPC006). CASEWORK VENDOR TO PROVIDE WOOD CLEAR SHERWIN WILLIAMS "CLASS A VARNISHSYSTEM" FLAMES SPREAD RETARDANT OR SIMILAR, APPLY PER MFR'S RECOMMENDATIONS ON ALL SIDES OF PANELS PRIOR TO SEALER. GC TO TEST PRIOR TO INSTALLATION.

LEGEND

INDICATES WALL BLOCKING. BLOCKING TO BE PROVIDED AS REQUIRED TO SUPPORT WALL ATTACHMENTS. EXTEND BLOCKING 4" (100mm) BEYOND EDGE OF ATTACHMENTS.

WALL TILE START POINT DATUM

PERMIT SET - FOR CONSTRUCTION USE

© 2022 STARBUCKS COFFEE COMPANY

STARBUCKS®
2401 UTAH AVENUE SOUTH
SEATTLE, WASHINGTON 98134
(206) 318-1575

THESE DRAWINGS AND THE PROJECT MANUAL ARE CONFIDENTIAL AND SHALL REMAIN THE SOLE PROPERTY OF STARBUCKS CORPORATION, WHICH IS THE OWNER OF THE COPYRIGHT IN THIS WORK. THEY SHALL NOT BE REPRODUCED (IN WHOLE OR IN PART), SHARED WITH THIRD PARTIES OR USED IN ANY MANNER ON OTHER PROJECTS OR EXTENSIONS TO THIS PROJECT WITHOUT THE PRIOR WRITTEN CONSENT OF STARBUCKS CORPORATION. THESE DRAWINGS AND SPECIFICATIONS ARE INTENDED TO EXPRESS DESIGN INTENT FOR A PROTOTYPICAL STARBUCKS STORE (WHICH IS SUBJECT TO CHANGE AT ANYTIME) AND DO NOT REFLECT ACTUAL SITE CONDITIONS. NEITHER PARTY SHALL HAVE ANY OBLIGATION NOR LIABILITY TO THE OTHER (EXCEPT STATED ABOVE) UNTIL A WRITTEN AGREEMENT IS FULLY EXECUTED BY BOTH PARTIES.

STARBUCKS TEMPLATE VERSION: i2024.01.01

PABLO GARCIA, AIA, REG. FL NO. AR99297

Gensler

MAIN OFFICE
M. ARTHUR GENSLER JR. & ASSOCIATES
FL QUALIFIER'S LIC. NO. AR96486
45 FREMONT ST, SUITE 1500
SAN FRANCISCO, CA 94105 USA
Tel (415) 433.3700
Fax (415) 836.4599

SATELLITE OFFICE
M. ARTHUR GENSLER JR. & ASSOCIATES
545 NW 26TH ST
SUITE 250
MIAMI, FL 33127 USA
Tel (305) 350.7070
Fax (305) 350.7071

PROJECT NAME:
NW 43RD & 53RD

PROJECT ADDRESS:
5480 NW 43RD STREET
GAINESVILLE, FL 32653

STORE #:	10820
PROJECT #:	34769-081
ISSUE DATE:	03-22-2024
DESIGN MANAGER:	ROMINA VIGNOLO
PRODUCTION DESIGNER:	GENSLER
CHECKED BY:	GENSLER

Revision Schedule

Rev	Date	By	Description

SHEET TITLE:
INTERIOR FINISH ELEVATIONS
SCALE: AS SHOWN

SHEET NUMBER:
I201

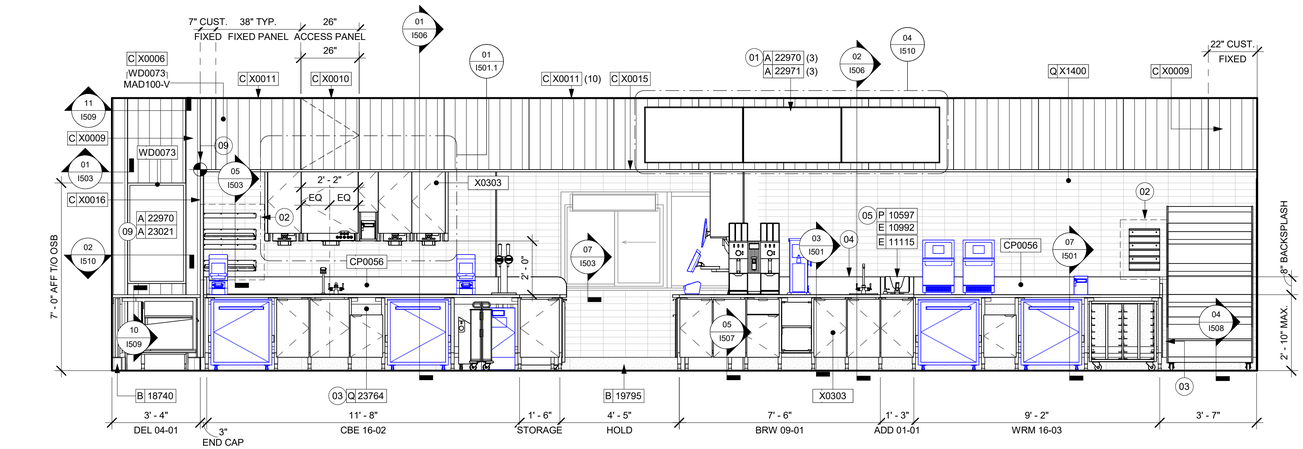

01 ELEVATION ENGINE - BACK BAR
Scale: 3/8" = 1'-0"

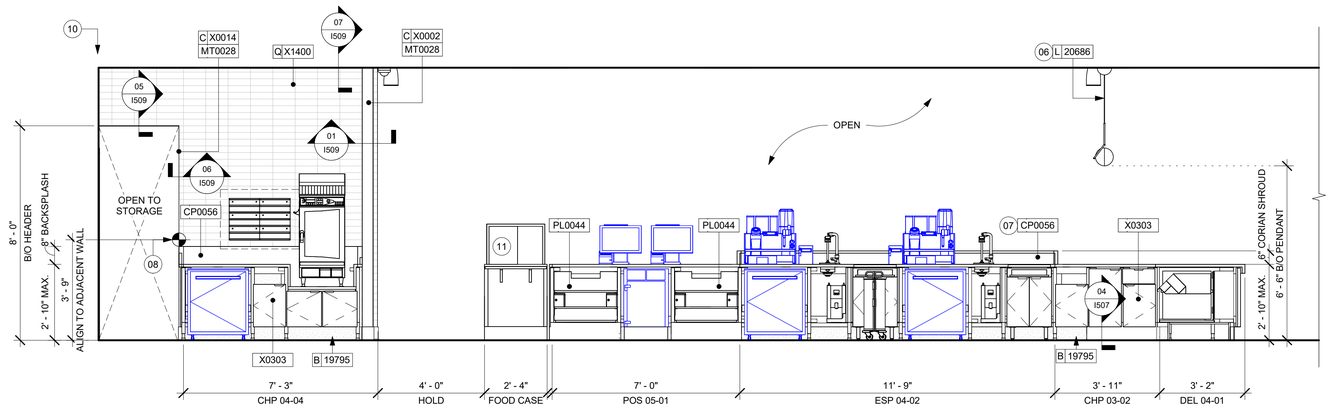

02 ELEVATION ENGINE - FRONT BAR PARTNER'S VIEW
Scale: 3/8" = 1'-0"

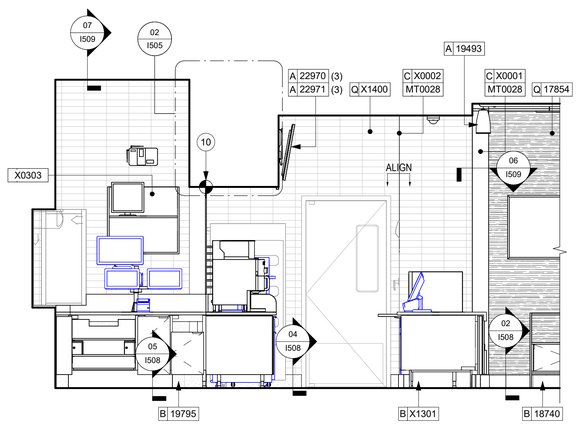

03 ELEVATION ENGINE - DOOR TO BOH
Scale: 3/8" = 1'-0"

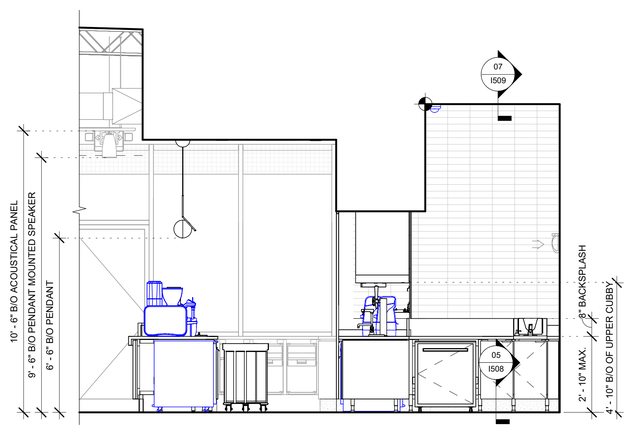

04 ELEVATION TOWARDS CBE
Scale: 3/8" = 1'-0"

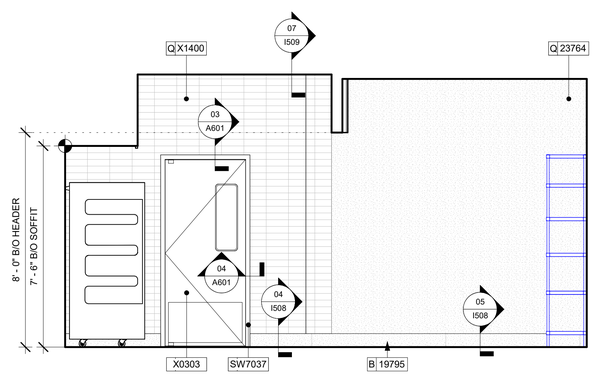

05 ELEVATION ENGINE - DOOR TO BOH
Scale: 3/8" = 1'-0"

KEYED NOTES

03 LIGHT FIXTURE (SEE REFLECTED CEILING PLAN ON SHEET I103 AND LIGHTING PLAN ON SHEET E102 FOR ADDITIONAL INFORMATION).
04 CEILING MOUNTED MOP (MOBILE ORDER AND PAY) INSTALL AS INDICATED. REFER TO DETAILS FOR ADDITIONAL INFORMATION AND SCHEDULE FOR SPECIFICATIONS.
05 CORIAN SHROUD.
06 INSTALL UNDERCOUNTER LED LIGHTING AT FRONT BAR AS INDICATED. REFER TO SCHEDULE FOR SPECIFICATIONS AND ELECTRICAL SHEETS FOR ADDITIONAL INFORMATION.
07 WALL MOUNTED EMERGENCY LIGH FIXTURE.
08 DO NOT BLOCK FOOD CASE INTAKE/EXHAUST.
09 STARTING POINT FOR TILE INSTALLATION. START WITH FULL TILE ON TOP. WALL TILE GROUT LINES TO ALIGN AS INDICATED. EXCESS TILE TO BE CUT TO ALIGN.
10 IN-WALL WOOD BLOCKING. VERIFY BLOCKING LOCATION, EXTENTS AND BLOCKING WITH MANUFACTURER'S REQUIREMENTS.
14 INSTALL ROLLER SHADE AS SHOWN.
18 (E) PLACE FIRE EXTINGUISHER PER LOCAL FIRE CODE REQUIREMENTS. COORDINATE TYPE AND SIZE WITH LOCAL INSPECTOR.

GENERAL NOTES

A. FOR GRAPHICS SCHEDULE, REFER TO THE FURNITURE, FIXTURES, AND EQUIPMENT (FF & E) SCHEDULES ON SHEET I601.

B. REFER TO MANUFACTURER'S INSTRUCTIONS INCLUDED WITH ARTWORK/GRAPHICS FOR PROPER INSTALLATION.

C. CHANGE PAINT COLOR ONLY AT INSIDE CORNERS UNLESS OTHERWISE INDICATED.

D. PAINT FINISHES SHALL BE APPLIED AS FOLLOWS, UNLESS NOTED OTHERWISE:
   a. WOODS AND METAL SURFACES SHALL BE SEMI-GLOSS OR EQUAL.
   b. ACCENT AND TRIM PAINTS TO BE SEMI-GLOSS OR EQUAL.
   c. WALL AND CEILING PAINTS TO BE EGGSHELL OR EQUAL.
   d. PAINTS IN BOH, RESTROOM(S) OR CAFE BAR SHALL BE SEMI-GLOSS OR EQUAL.

E. PAINT SUBSTITUTIONS ARE NOT ALLOWED. USE STARBUCKS NATIONAL ACCOUNT COLOR CODE WHEN ORDERING PAINTS.

F. FLOORS, WALLS AND CEILING FINISHES IN FOOD PREPARATION AREAS SHALL BE SMOOTH, NON-TOXIC, NON-ABSORBENT, DURABLE AND EASILY CLEANABLE. PAINT SHALL BE WASHABLE; SEMI-GLOSS OR HIGH GLOSS FINISH.

G. ALL WOOD SURFACES (DOORS, TRIM, SHELVES, CABINETRY) SHALL BE SEALED.

H. REFER TO CASEWORK FINISH SCHEDULE ON THE CASEWORK FINISH PLAN ON SHEET I102 FOR CASEWORK FINISH MATERIAL INFORMATION.

I. ALIGN TILE TRANSITIONS ON WHOLE TILES AS SHOWN.

J. ALL FLOOR AND WALL JUNCTIONS IN STORAGE AND FOOD PREPARATION AREAS SHALL HAVE A 6" COVED BASE.

K. ALL FOOD STORAGE SHALL BE 6" (150MM) A.F.F.

L. INSTALL BLOCKING AND HANGERS FOR WALL SHELVING BEFORE INSTALLING BACK BAR TILE.

M. GENERAL CONTRACTOR TO PROVIDE AND INSTALL WORKROOM WALL FINISHES.

N. CLASS A FIRE RETARDANT TREATMENT (PER ASTM E 84). OR PASSES NFPA 286 (DID: SPC006). CASEWORK VENDOR TO PROVIDE WOOD CLEAR SHERWIN WILLIAMS "CLASS A VARNISHSYSTEM" FLAMES SPREAD RETARDANT OR SIMILAR, APPLY PER MFR'S RECOMMENDATIONS ON ALL SIDES OF PANELS PRIOR TO SEALER. GC TO TEST PRIOR TO INSTALLATION.

LEGEND

INDICATES WALL BLOCKING. BLOCKING TO BE PROVIDED AS REQUIRED TO SUPPORT WALL ATTACHMENTS. EXTEND BLOCKING 4" (100mm) BEYOND EDGE OF ATTACHMENTS.

WALL TILE START POINT DATUM

PERMIT SET - FOR CONSTRUCTION USE

© 2022 STARBUCKS COFFEE COMPANY

STARBUCKS®
2401 UTAH AVENUE SOUTH
SEATTLE, WASHINGTON 98134
(206) 318-1575

THESE DRAWINGS AND THE PROJECT MANUAL ARE CONFIDENTIAL AND SHALL REMAIN THE SOLE PROPERTY OF STARBUCKS CORPORATION, WHICH IS THE OWNER OF THE COPYRIGHT IN THIS WORK. THEY SHALL NOT BE REPRODUCED (IN WHOLE OR IN PART), SHARED WITH THIRD PARTIES OR USED IN ANY MANNER ON OTHER PROJECTS OR EXTENSIONS TO THIS PROJECT WITHOUT THE PRIOR WRITTEN CONSENT OF STARBUCKS CORPORATION. THESE DRAWINGS AND SPECIFICATIONS ARE INTENDED TO EXPRESS DESIGN INTENT FOR A PROTOTYPICAL STARBUCKS STORE (WHICH IS SUBJECT TO CHANGE AT ANYTIME) AND DO NOT REFLECT ACTUAL SITE CONDITIONS. NEITHER PARTY SHALL HAVE ANY OBLIGATION NOR LIABILITY TO THE OTHER (EXCEPT STATED ABOVE) UNTIL A WRITTEN AGREEMENT IS FULLY EXECUTED BY BOTH PARTIES.

STARBUCKS TEMPLATE VERSION: i2024.01.01

PABLO GARCIA, AIA, REG. FL NO. AR99297

Gensler
MAIN OFFICE
M. ARTHUR GENSLER JR. & ASSOCIATES
FL QUALIFIER'S LIC. NO. AR96486
45 FREMONT ST, SUITE 1500
SAN FRANCISCO, CA 94105 USA
Tel (415) 433.3700
Fax (415) 836.4599
SATELLITE OFFICE
M. ARTHUR GENSLER JR. & ASSOCIATES
545 NW 26TH ST
SUITE 250
MIAMI, FL 33127 USA
Tel (305) 350.7070
Fax (305) 350.7071

PROJECT NAME:
NW 43RD & 53RD

PROJECT ADDRESS:
5480 NW 43RD STREET
GAINESVILLE, FL 32653

STORE #:	10820
PROJECT #:	34769-081
ISSUE DATE:	03-22-2024
DESIGN MANAGER:	ROMINA VIGNOLO
PRODUCTION DESIGNER:	GENSLER
CHECKED BY:	GENSLER

Revision Schedule

Rev	Date	By	Description

SHEET TITLE:
INTERIOR FINISH ELEVATIONS
SCALE: AS SHOWN

SHEET NUMBER:
I202

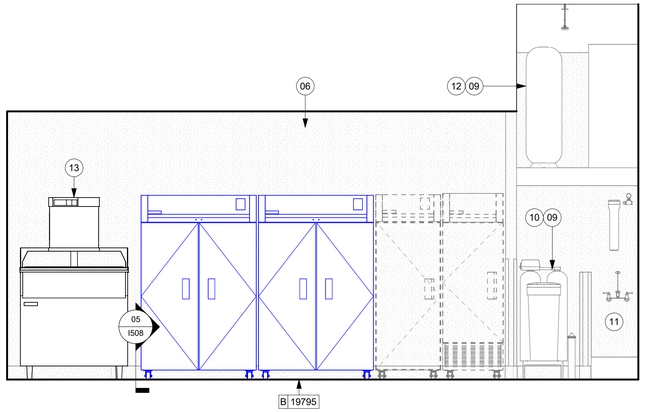

01 ELEVATION BOH - EXISTING FILTRATION SYSTEM
Scale: 3/8" = 1'-0"

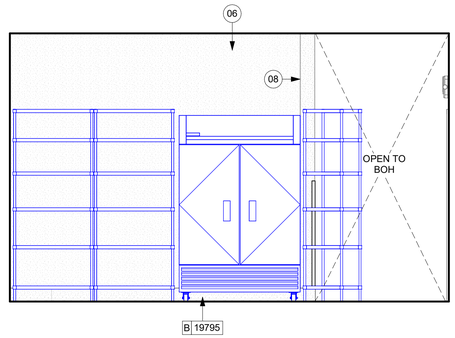

02 ELEVATION BOH - MOP SINK
Scale: 3/8" = 1'-0"

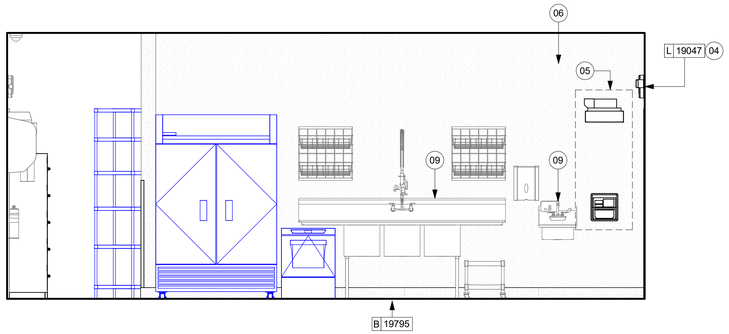

03 ELEVATION BOH - HAND SINK & 3 COMP SINK
Scale: 3/8" = 1'-0"

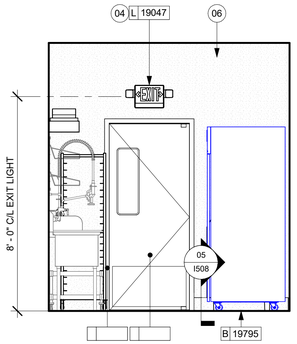

04 ELEVATION BOH - ENTRY DOOR
Scale: 3/8" = 1'-0"

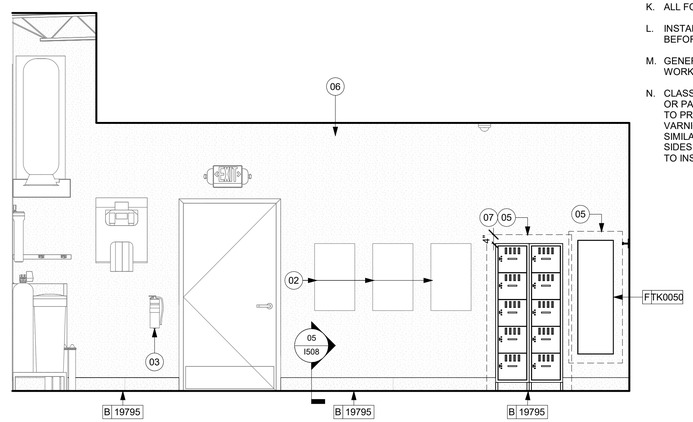

05 ELEVATION BOH - EXIT DOOR
Scale: 3/8" = 1'-0"

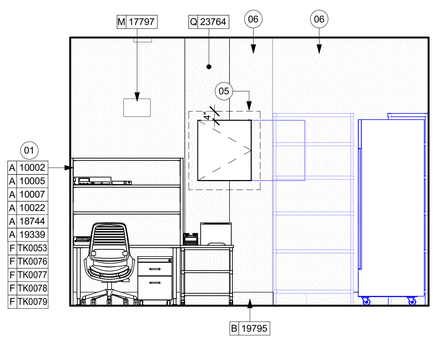

06 ELEVATION BOH
Scale: 3/8" = 1'-0"

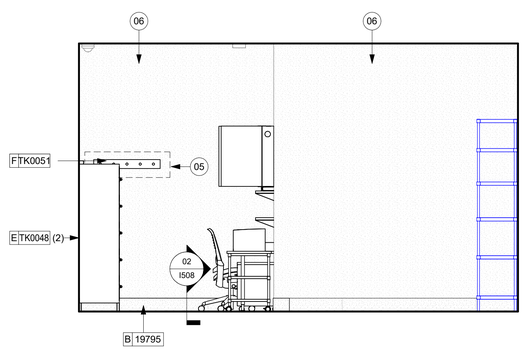

07 ELEVATION BOH - MANAGER'S DESK
Scale: 3/8" = 1'-0"

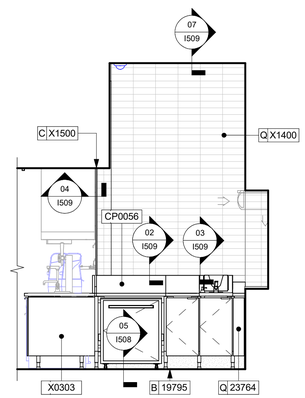

8 DT - WEST
Scale: 3/8" = 1'-0"

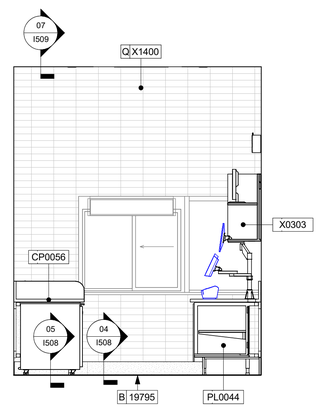

9 DT - NORTH
Scale: 3/8" = 1'-0"

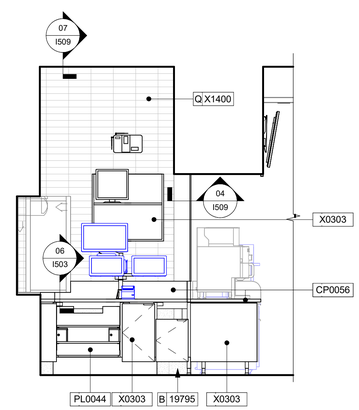

10 DT -EAST
Scale: 3/8" = 1'-0"

KEYED NOTES

01 (N) MANAGER'S DESK (SEE ENLARGED DETAILS).
02 (E) ELECTRICAL PANELS (SEE ELECTRICAL DRAWINGS FOR ADDITIONAL INFORMATION).
03 (E) PLACE FIRE EXTINGUISHER PER LOCAL FIRE CODE REQUIREMENTS. COORDINATE TYPE AND SIZE WITH LOCAL INSPECTOR.
04 (N) EMERGENCY EXIT/LIGHT SIGNAGE COMBO, WALL MOUNTED.
05 IN-WALL WOOD BLOCKING. VERIFY BLOCKING LOCATION, EXTENTS AND BLOCKING WITH MANUFACTURER'S REQUIREMENTS.
06 EXISTING WALL FINISHES TO REMAIN. GC TO CLEAN, PATCH AND REPAIR TO ACHIEVE LIKE-NEW CONDITION.
07 SECURE LOCKERS TO WALL
08 FOR SEAM JOINTS, SLIDE DIVISION MOLDING UNDER EDGE OF FIRST PANEL.
09 GC TO REPLACE WALL FINISH, SHEATHING IF REQUIRED.
10 WALL MOUNT HAND SINK, SOAP AND PAPER TOWEL DISPENSER. GC TO PROVIDE WALL BLOCKING AS REQUIRED.
11 (E) WATER FILTRATION EQUIPMENT.
12 (E) MOP SINK.
13 ICE MACHINE. REFER TO PLUMBING AND ELECTRICAL DRAWINGS FOR MORE INFO.

GENERAL NOTES

A. FOR GRAPHICS SCHEDULE, REFER TO THE FURNITURE, FIXTURES, AND EQUIPMENT (FF & E) SCHEDULES ON SHEET I601.

B. REFER TO MANUFACTURER'S INSTRUCTIONS INCLUDED WITH ARTWORK/GRAPHICS FOR PROPER INSTALLATION.

C. CHANGE PAINT COLOR ONLY AT INSIDE CORNERS UNLESS OTHERWISE INDICATED.

D. PAINT FINISHES SHALL BE APPLIED AS FOLLOWS, UNLESS NOTED OTHERWISE:
   a. WOODS AND METAL SURFACES SHALL BE SEMI-GLOSS OR EQUAL.
   b. ACCENT AND TRIM PAINTS TO BE SEMI-GLOSS OR EQUAL.
   c. WALL AND CEILING PAINTS TO BE EGGSHELL OR EQUAL.
   d. PAINTS IN BOH, RESTROOM(S) OR CAFE BAR SHALL BE SEMI-GLOSS OR EQUAL.

E. PAINT SUBSTITUTIONS ARE NOT ALLOWED. USE STARBUCKS NATIONAL ACCOUNT COLOR CODE WHEN ORDERING PAINTS.

F. FLOORS, WALLS AND CEILING FINISHES IN FOOD PREPARATION AREAS SHALL BE SMOOTH, NON-TOXIC, NON-ABSORBENT, DURABLE AND EASILY CLEANABLE. PAINT SHALL BE WASHABLE; SEMI-GLOSS OR HIGH GLOSS FINISH.

G. ALL WOOD SURFACES (DOORS, TRIM, SHELVES, CABINETRY) SHALL BE SEALED.

H. REFER TO CASEWORK FINISH SCHEDULE ON THE CASEWORK FINISH PLAN ON SHEET I102 FOR CASEWORK FINISH MATERIAL INFORMATION.

I. ALIGN TILE TRANSITIONS ON WHOLE TILES AS SHOWN.

J. ALL FLOOR AND WALL JUNCTIONS IN STORAGE AND FOOD PREPARATION AREAS SHALL HAVE A 6" COVED BASE.

K. ALL FOOD STORAGE SHALL BE 6" (150MM) A.F.F.

L. INSTALL BLOCKING AND HANGERS FOR WALL SHELVING BEFORE INSTALLING BACK BAR TILE.

M. GENERAL CONTRACTOR TO PROVIDE AND INSTALL WORKROOM WALL FINISHES.

N. CLASS A FIRE RETARDANT TREATMENT (PER ASTM E 84). OR PASSES NFPA 286 (DID: SPC006). CASEWORK VENDOR TO PROVIDE WOOD CLEAR SHERWIN WILLIAMS "CLASS A VARNISHSYSTEM" FLAMES SPREAD RETARDANT OR SIMILAR, APPLY PER MFR'S RECOMMENDATIONS ON ALL SIDES OF PANELS PRIOR TO SEALER. GC TO TEST PRIOR TO INSTALLATION.

PERMIT SET - FOR CONSTRUCTION USE

© 2022 STARBUCKS COFFEE COMPANY

STARBUCKS®
2401 UTAH AVENUE SOUTH
SEATTLE, WASHINGTON 98134
(206) 318-1575

THESE DRAWINGS AND THE PROJECT MANUAL ARE CONFIDENTIAL AND SHALL REMAIN THE SOLE PROPERTY OF STARBUCKS CORPORATION, WHICH IS THE OWNER OF THE COPYRIGHT IN THIS WORK. THEY SHALL NOT BE REPRODUCED (IN WHOLE OR IN PART), SHARED WITH THIRD PARTIES OR USED IN ANY MANNER ON OTHER PROJECTS OR EXTENSIONS TO THIS PROJECT WITHOUT THE PRIOR WRITTEN CONSENT OF STARBUCKS CORPORATION. THESE DRAWINGS AND SPECIFICATIONS ARE INTENDED TO EXPRESS DESIGN INTENT FOR A PROTOTYPICAL STARBUCKS STORE (WHICH IS SUBJECT TO CHANGE AT ANYTIME) AND DO NOT REFLECT ACTUAL SITE CONDITIONS. NEITHER PARTY SHALL HAVE ANY OBLIGATION NOR LIABILITY TO THE OTHER (EXCEPT STATED ABOVE) UNTIL A WRITTEN AGREEMENT IS FULLY EXECUTED BY BOTH PARTIES.

STARBUCKS TEMPLATE VERSION: i2024.01.01

PABLO GARCIA, AIA, REG. FL NO. AR99297

Gensler
MAIN OFFICE
M. ARTHUR GENSLER JR. & ASSOCIATES
FL QUALIFIER'S LIC. NO. AR96486
43 FREMONT ST, SUITE 1500
SAN FRANCISCO, CA 94105 USA
Tel (415) 433.3700
Fax (415) 836.4599

SATELLITE OFFICE
M. ARTHUR GENSLER JR. & ASSOCIATES
545 NW 26TH ST
SUITE 250
MIAMI, FL 33127 USA
Tel (305) 350.7070
Fax (305) 350.7071

PROJECT NAME:
NW 43RD & 53RD

PROJECT ADDRESS:
5480 NW 43RD STREET
GAINESVILLE, FL 32653

STORE #:	10820
PROJECT #:	34769-081
ISSUE DATE:	03-22-2024
DESIGN MANAGER:	ROMINA VIGNOLO
PRODUCTION DESIGNER:	GENSLER
CHECKED BY:	GENSLER

Revision Schedule

Rev	Date	By	Description

SHEET TITLE:
INTERIOR FINISH ELEVATIONS
SCALE: AS SHOWN

SHEET NUMBER:
I203

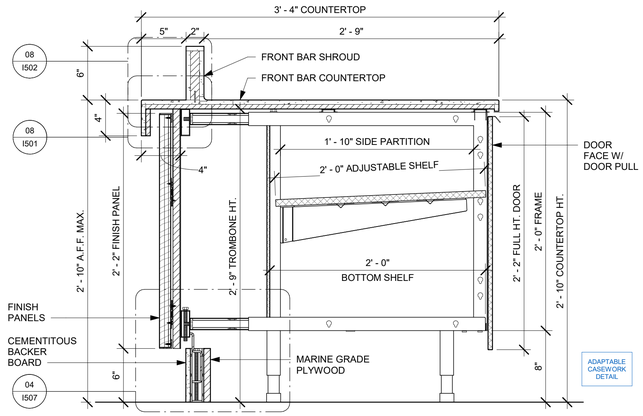

01 AC FRONT BAR CABINET ASSEMBLY ON LEGS SECTION
Scale: 1 1/2" = 1'-0"

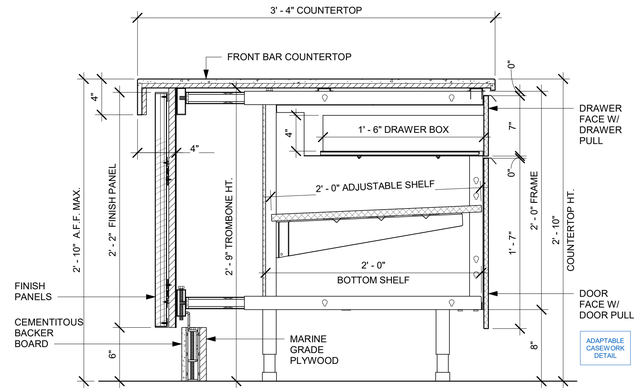

02 AC FRONT BAR DRAWER CABINET ASSEMBLY ON LEGS SECTION
Scale: 1 1/2" = 1'-0"

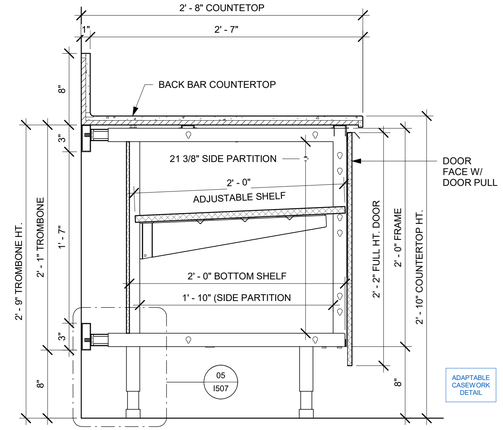

03 AC BACK BAR CABINET ASSEMBLY ON LEGS SECTION
Scale: 1 1/2" = 1'-0"

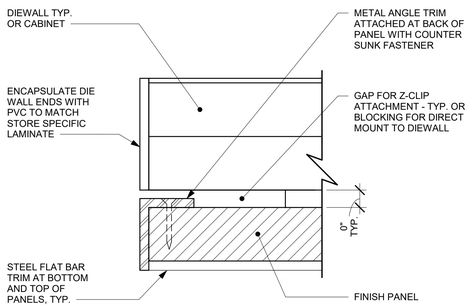

04 TYPICAL DETAIL AT FINISH PANEL END - VERTICAL METAL TRIM
Scale: 12" = 1'-0"

NOTES:

1. LOCATE PUMP WITHIN CORD LENGTH LIMIT. ORIENT WITH PUMP HEAD LEFT, RIGHT AND AT BOTTOM. LOOSEN PUMP HEAD CLAMP, ROTATE AND RE-TIGHTEN AS REQUIRED PER ORIENTATION TO PROVIDE FRONT ACCESS TO FLOW. ADJUSTMENT WITHIN CORD LENGTH LIMIT.
2. USE LOCKTITE ON ISOLATOR THREADS. DO NOT OVER TIGHTEN.
3. LOOSEN PUMP HEAD CLAMP, ROTATE AND RE-TIGHTEN AS REQUIRED FOR PUMP ORIENTATION.
4. EACH BACKER BOARD'S ASSEMBLY COMPONENTS INCLUDE:
   (1) BACKER BOARDS
   (4) TENETS, 1/4-20 VENDOR MOUNTED
   (8) WOOD SCREWS #8 1-1/4" (32MM)
   (4) NEOPRENE ISOLATORS, KARMAN RUBBER, K84-60 NEOPRENE
   (4) LOCK NUTS, 1/4-20 NYLON
   (4) WASHERS, 1/4" (7MM) FLAT

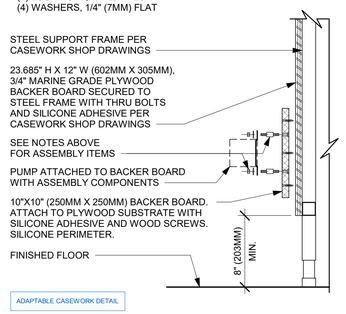

05 ESPRESSO PUMP MOUNTED AT CABINET
Scale: 1 1/2" = 1'-0"

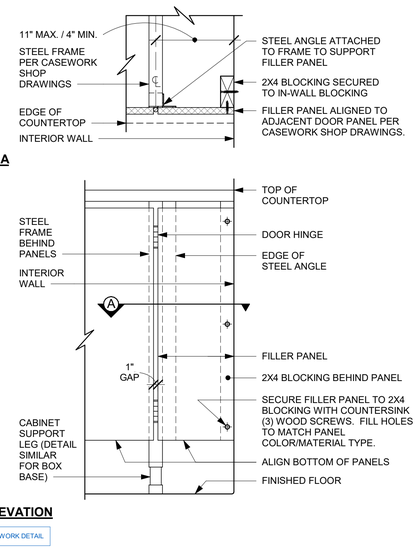

06 FILLER PANEL AT WALL
Scale: 1 1/2" = 1'-0"

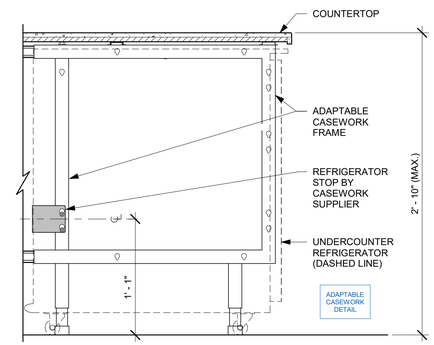

07 AC UNDERCOUNTER REFRIGERATOR SECTION
Scale: 1 1/2" = 1'-0"

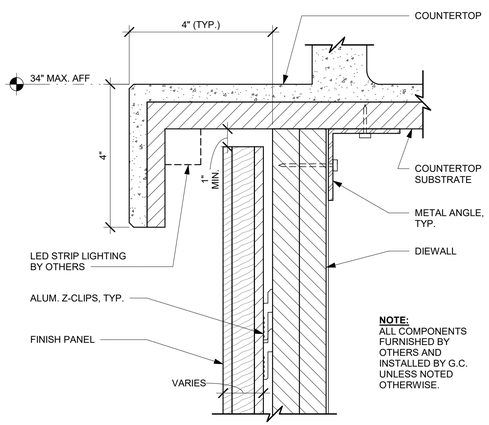

08 FINISH PANEL - BUILT-UP COUNTERTOP OVERHANG
Scale: 6" = 1'-0"

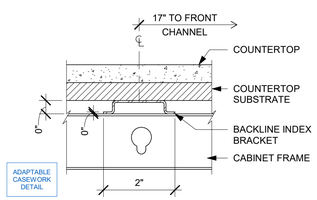

09 AC COUNTERTOP SUPPORT CHANNEL
Scale: 6" = 1'-0"

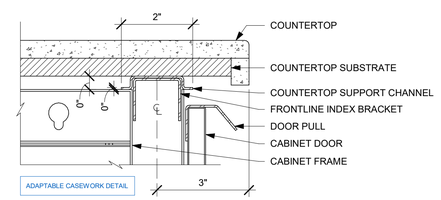

10 AC COUNTERTOP FRONT HAT SUPPORT CHANNEL
Scale: 6" = 1'-0"

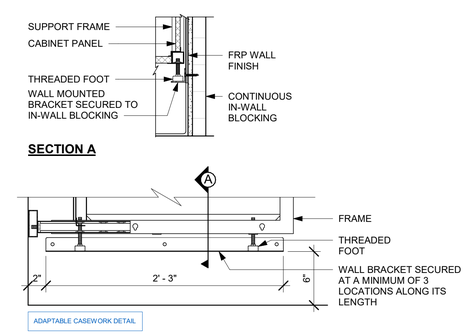

11 AC BACKLINE WALL BRACKET ASSEMBLY
Scale: 1 1/2" = 1'-0"

PERMIT SET - FOR CONSTRUCTION USE

© 2022 STARBUCKS COFFEE COMPANY

STARBUCKS®
2401 UTAH AVENUE SOUTH
SEATTLE, WASHINGTON 98134
(206) 318-1575

THESE DRAWINGS AND THE PROJECT MANUAL ARE CONFIDENTIAL AND SHALL REMAIN THE SOLE PROPERTY OF STARBUCKS CORPORATION, WHICH IS THE OWNER OF THE COPYRIGHT IN THIS WORK. THEY SHALL NOT BE REPRODUCED (IN WHOLE OR IN PART), SHARED WITH THIRD PARTIES OR USED IN ANY MANNER ON OTHER PROJECTS OR EXTENSIONS TO THIS PROJECT WITHOUT THE PRIOR WRITTEN CONSENT OF STARBUCKS CORPORATION. THESE DRAWINGS AND SPECIFICATIONS ARE INTENDED TO EXPRESS DESIGN INTENT FOR A PROTOTYPICAL STARBUCKS STORE (WHICH IS SUBJECT TO CHANGE AT ANYTIME) AND DO NOT REFLECT ACTUAL SITE CONDITIONS. NEITHER PARTY SHALL HAVE ANY OBLIGATION NOR LIABILITY TO THE OTHER (EXCEPT STATED ABOVE) UNTIL A WRITTEN AGREEMENT IS FULLY EXECUTED BY BOTH PARTIES.

STARBUCKS TEMPLATE VERSION: i2024.01.01

PABLO GARCIA, AIA, REG. FL NO. AR99297

Gensler
MAIN OFFICE
M. ARTHUR GENSLER JR. & ASSOCIATES
FL QUALIFIER'S LIC. NO. AR96486
45 FREMONT ST, SUITE 1500
SAN FRANCISCO, CA 94105 USA
Tel (415) 433.3700
Fax (415) 836.4599

SATELLITE OFFICE
M. ARTHUR GENSLER JR. & ASSOCIATES
545 NW 26TH ST
SUITE 250
MIAMI, FL 33127 USA
Tel (305) 350.7070
Fax (305) 350.7071

PROJECT NAME:
NW 43RD & 53RD

PROJECT ADDRESS:
5480 NW 43RD STREET
GAINESVILLE, FL 32653

STORE #:	10820
PROJECT #:	34769-081
ISSUE DATE:	03-22-2024
DESIGN MANAGER:	ROMINA VIGNOLO
PRODUCTION DESIGNER:	GENSLER
CHECKED BY:	GENSLER

Revision Schedule

Rev	Date	By	Description

SHEET TITLE:
ADAPTABLE CASEWORK DETAILS
SCALE: AS SHOWN

SHEET NUMBER:
I501

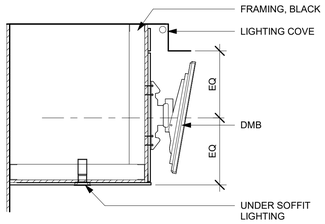

SECTION D - DMB

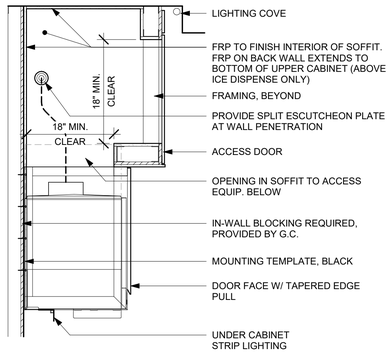

SECTION C - NUGGET ICE DISPENSE

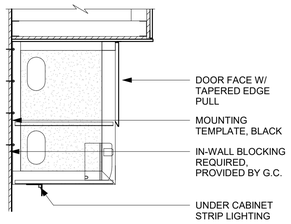

SECTION B - CUP LABELER

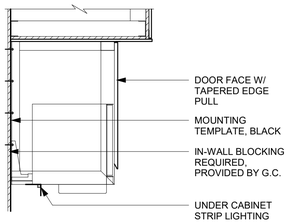

SECTION A - MILK DISPENSE

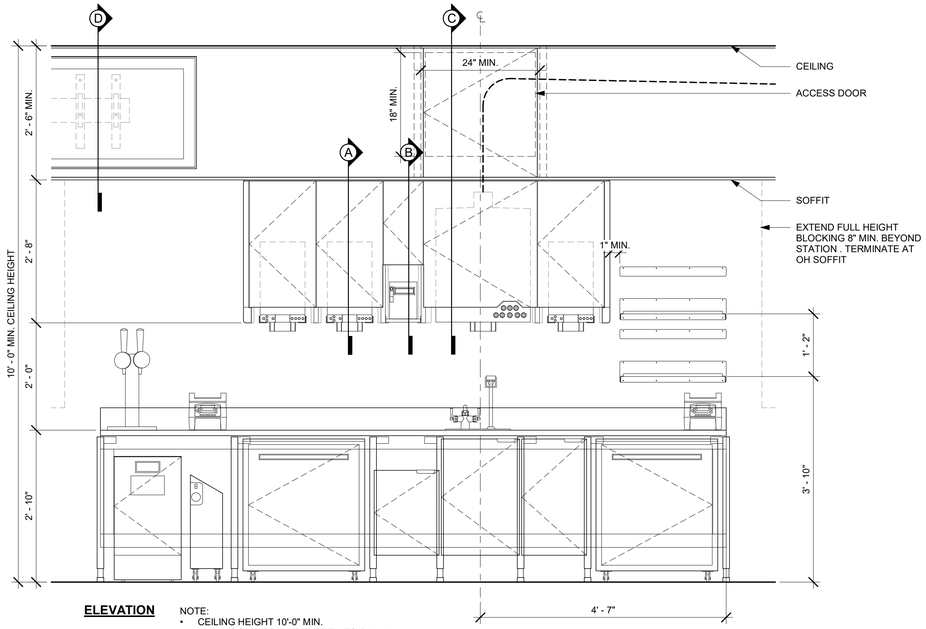

ELEVATION

NOTE:
- CEILING HEIGHT 10'-0" MIN.
  1. NUGGET ICE RIDE SYSTEM TO RUN IN STANDARD SOFFIT
  2. DMB TO BE MOUNTED ON FACE OF SOFFIT
- ACCESS PANEL TO BE SIZED TO AVOID CONFLICT WITH LIGHTING COVE
- PROVIDE CONTINUOUS FLOOR TO CEILING BLOCKING FOR THE ENTIRE LENGTH OF THE STATION

01 UPPER CABINET/SOFFIT ASSEMBLY - STANDARD

Scale: 3/4" = 1'-0"

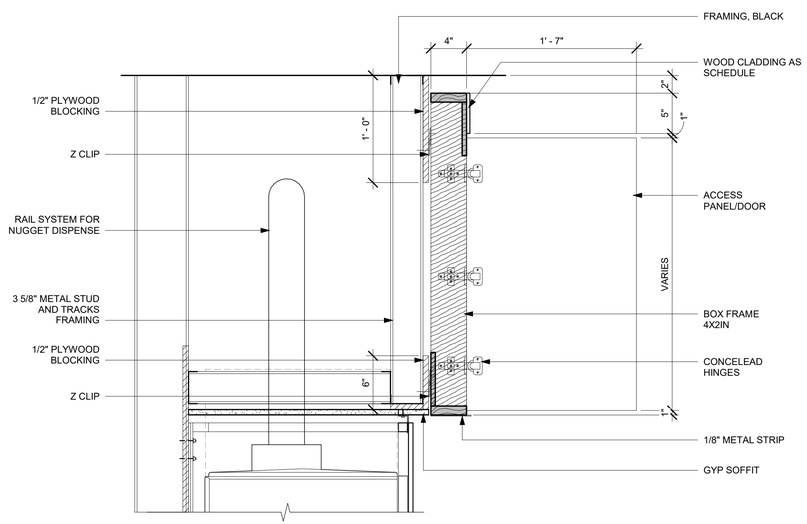

02 SOFFIT DOOR

Scale: 1 1/2" = 1'-0"

PERMIT SET - FOR CONSTRUCTION USE

© 2022 STARBUCKS COFFEE COMPANY

STARBUCKS®
2401 UTAH AVENUE SOUTH
SEATTLE, WASHINGTON 98134
(206) 318-1575

THESE DRAWINGS AND THE PROJECT MANUAL ARE CONFIDENTIAL AND SHALL REMAIN THE SOLE PROPERTY OF STARBUCKS CORPORATION, WHICH IS THE OWNER OF THE COPYRIGHT IN THIS WORK. THEY SHALL NOT BE REPRODUCED (IN WHOLE OR IN PART), SHARED WITH THIRD PARTIES OR USED IN ANY MANNER ON OTHER PROJECTS OR EXTENSIONS TO THIS PROJECT WITHOUT THE PRIOR WRITTEN CONSENT OF STARBUCKS CORPORATION. THESE DRAWINGS AND SPECIFICATIONS ARE INTENDED TO EXPRESS DESIGN INTENT FOR A PROTOTYPICAL STARBUCKS STORE (WHICH IS SUBJECT TO CHANGE AT ANYTIME) AND DO NOT REFLECT ACTUAL SITE CONDITIONS. NEITHER PARTY SHALL HAVE ANY OBLIGATION NOR LIABILITY TO THE OTHER (EXCEPT STATED ABOVE) UNTIL A WRITTEN AGREEMENT IS FULLY EXECUTED BY BOTH PARTIES.

STARBUCKS TEMPLATE VERSION: i2024.01.01

PABLO GARCIA, AIA, REG. FL NO. AR99297

Gensler

MAIN OFFICE
M. ARTHUR GENSLER JR. & ASSOCIATES
FL QUALIFIER'S LIC. NO. AR96486
45 FREMONT ST, SUITE 1500
SAN FRANCISCO, CA 94105 USA
Tel (415) 433.3700
Fax (415) 836.4599

SATELLITE OFFICE
M. ARTHUR GENSLER JR. & ASSOCIATES
545 NW 26TH ST
SUITE 250
MIAMI, FL 33127 USA
Tel (305) 350.7070
Fax (305) 350.7071

PROJECT NAME: NW 43RD & 53RD

PROJECT ADDRESS: 5480 NW 43RD STREET GAINESVILLE, FL 32653

STORE #:	10820
PROJECT #:	34769-081
ISSUE DATE:	03-22-2024
DESIGN MANAGER:	ROMINA VIGNOLO
PRODUCTION DESIGNER:	GENSLER
CHECKED BY:	GENSLER

Revision Schedule

Rev	Date	By	Description

SHEET TITLE:
ADAPTABLE CASEWORK SECTIONS
SCALE: AS SHOWN

SHEET NUMBER:
I501.1

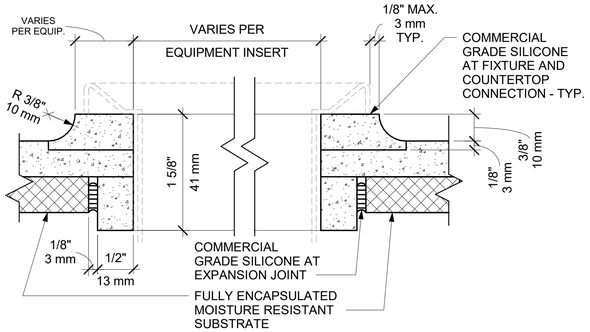

01 CORIAN COUNTERTOP TYP. SINK CUTOUT W/ COVED EDGE
Scale: 12" = 1'-0"

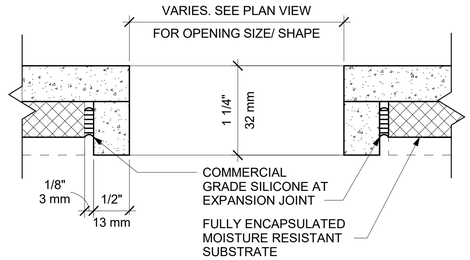

02 CORIAN COUNTERTOP TYP. CUTOUT AT TRASH AND GROMMET
Scale: 12" = 1'-0"

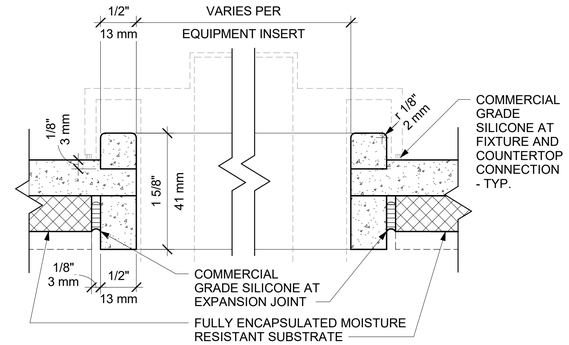

03 CORIAN COUNTERTOP TYP. ICE BIN CUTOUT WITH W/ SQUARED EDGE
Scale: 12" = 1'-0"

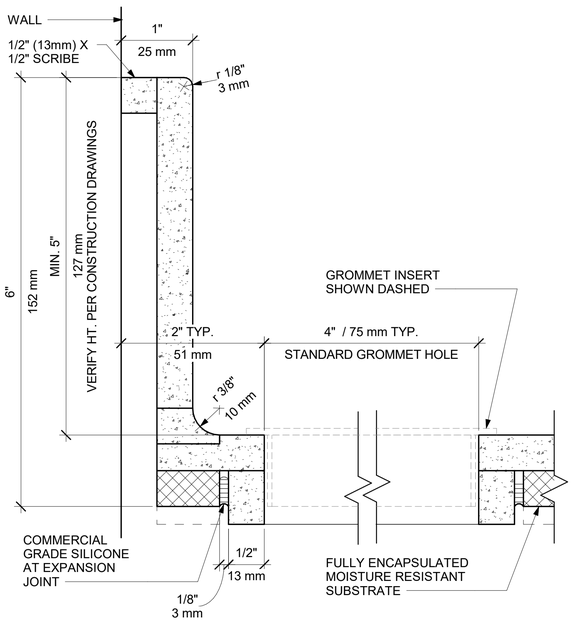

04 CORIAN COUNTERTOP BACKSPLASH AND GROMMET
Scale: 12" = 1'-0"

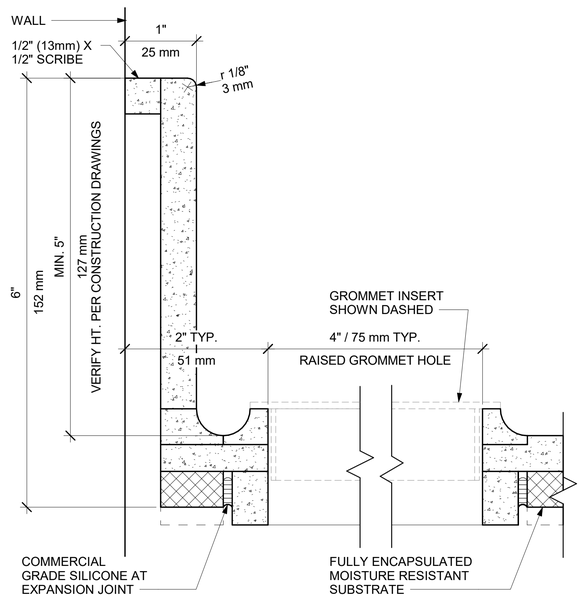

05 CORIAN COUNTERTOP BACKSPLASH AND COVED GROMMET
Scale: 12" = 1'-0"

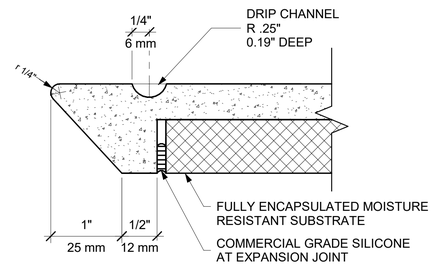

06 CORIAN COUNTERTOP FRONT EDGE AT ICE BIN
Scale: 12" = 1'-0"

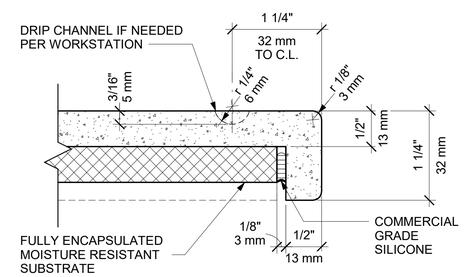

07 CORIAN COUNTERTOP FRONT EDGE
Scale: 12" = 1'-0"

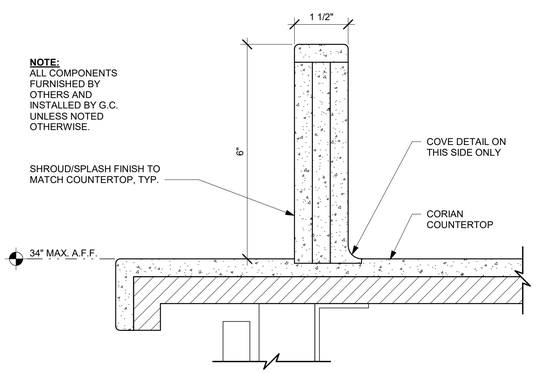

08 ESP SHROUD - CORIAN
Scale: 6" = 1'-0"

PERMIT SET - FOR CONSTRUCTION USE

© 2022 STARBUCKS COFFEE COMPANY

STARBUCKS®
2401 UTAH AVENUE SOUTH
SEATTLE, WASHINGTON 98134
(206) 318-1575

THESE DRAWINGS AND THE PROJECT MANUAL ARE CONFIDENTIAL AND SHALL REMAIN THE SOLE PROPERTY OF STARBUCKS CORPORATION, WHICH IS THE OWNER OF THE COPYRIGHT IN THIS WORK. THEY SHALL NOT BE REPRODUCED (IN WHOLE OR IN PART), SHARED WITH THIRD PARTIES OR USED IN ANY MANNER ON OTHER PROJECTS OR EXTENSIONS TO THIS PROJECT WITHOUT THE PRIOR WRITTEN CONSENT OF STARBUCKS CORPORATION. THESE DRAWINGS AND SPECIFICATIONS ARE INTENDED TO EXPRESS DESIGN INTENT FOR A PROTOTYPICAL STARBUCKS STORE (WHICH IS SUBJECT TO CHANGE AT ANYTIME) AND DO NOT REFLECT ACTUAL SITE CONDITIONS. NEITHER PARTY SHALL HAVE ANY OBLIGATION NOR LIABILITY TO THE OTHER (EXCEPT STATED ABOVE) UNTIL A WRITTEN AGREEMENT IS FULLY EXECUTED BY BOTH PARTIES.

STARBUCKS TEMPLATE VERSION: i2024.01.01

PABLO GARCIA, AIA, REG. FL NO. AR99297

Gensler

MAIN OFFICE
M. ARTHUR GENSLER JR. & ASSOCIATES
FL QUALIFIERS LIC. NO. AR98486
45 FREMONT ST, SUITE 1500
SAN FRANCISCO, CA 94105 USA
Tel (415) 433.3700
Fax (415) 836.4599

SATELLITE OFFICE
M. ARTHUR GENSLER JR. & ASSOCIATES
545 NW 26TH ST
SUITE 250
MIAMI, FL 33127 USA
Tel (305) 350.7070
Fax (305) 350.7071

PROJECT NAME:
NW 43RD & 53RD

PROJECT ADDRESS:
5480 NW 43RD STREET
GAINESVILLE, FL 32653

STORE #:	10820
PROJECT #:	34769-081
ISSUE DATE:	03-22-2024
DESIGN MANAGER:	ROMINA VIGNOLO
PRODUCTION DESIGNER:	GENSLER
CHECKED BY:	GENSLER

Revision Schedule

Rev	Date	By	Description

SHEET TITLE:
CASEWORK DETAILS

SCALE: AS SHOWN

SHEET NUMBER:
I502

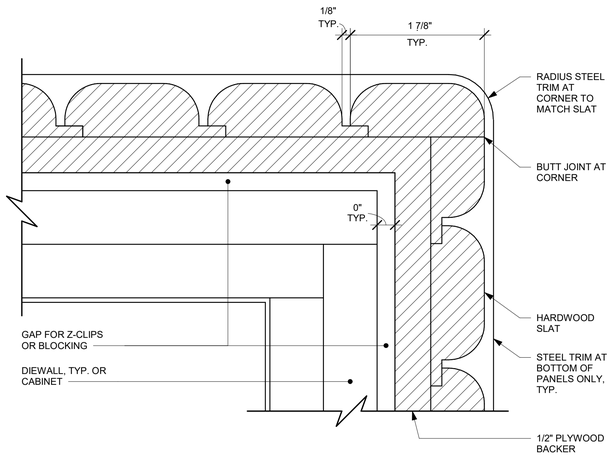

01 ALTERNATE CORNER DETAIL - ROUNDED VERTICAL SLATS

Scale: 1 2" = 1'-0"

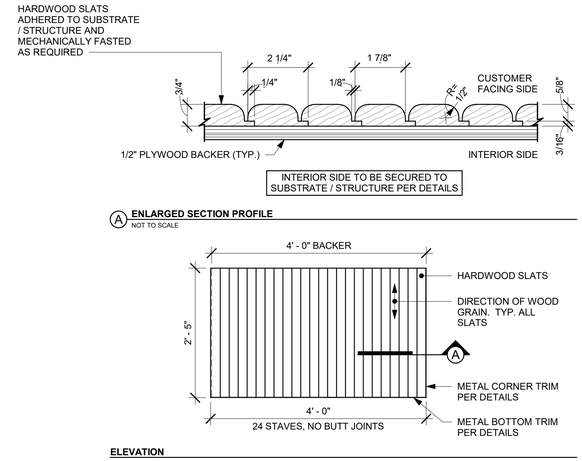

02 FINISH APPLICATION (MAD 200-V) ROUNDED SLAT W/ REVEAL

Scale: 3/4" = 1'-0"

WALL TYPE FASTENER SCHEDULE			
WALL TYPE	WALL BLOCKING	FASTENERS	NOTES
WOOD FRAME	X	#8 X3" (75MM) WD OR EQUIVALENT	REFER TO BLOCKING REQUIREMENTS
METAL FRAME	X	#6 CT. X 1 1/4" (30MM) MTL/WD OR EQUIVALENT	REFER TO BLOCKING REQUIREMENTS
CMU		MIN. 5/16" X 3" (8MM X 75MM) TAPCON OR EQUIVALENT	SPACE PER DETAIL THIS SHEET
CONCRETE		MIN. 1/4" X 3" (7MM X 75MM) SLEEVE ANCHOR OR EQUIVALENT	SPACE PER DETAIL THIS SHEET
BRICK		MIN. 1/4" X 1" (7MM X 25MM) WEDGE ANCHOR OR EQUIVALENT	SPACE PER DETAIL THIS SHEET AVOID SETTING ANCHORS IN MORTAR JOINTS

STUD WALL BLOCKING REQUIREMENTS:
WOOD STUD WALLS REQUIRE MIN. 2" X 6" (50MM X 150MM) WOOD BLOCKING SECURED FLUSH TO STUD FACE WITH (3) 10D NAILS (OR EQUIVALENT)

METAL STUD WALLS REQUIRE MIN. 2" X 6" (50MM X 150MM) WOOD BLOCKING SECURED FLUSH TO STUD FACE WITH MIN. (3) #6 CT. 1.25" (30MM) SCREWS (OR EQUIVALENT)

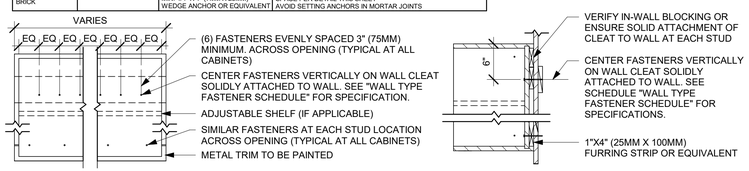

03 UPPER CABINET ATTACHMENT

Scale: 1" = 1'-0"

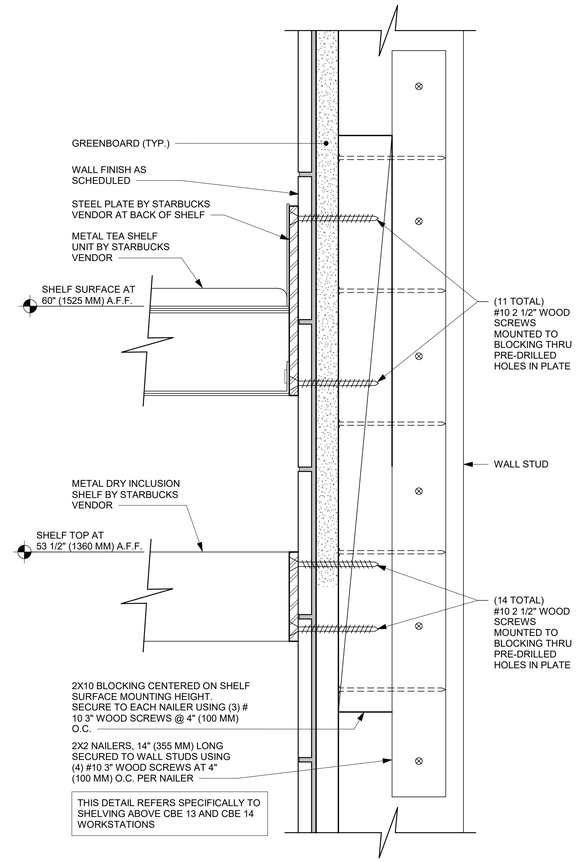

05 METAL TEA AND DRY INCLUSION SHELF WALL ATTACHMENT

Scale: 6" = 1'-0"

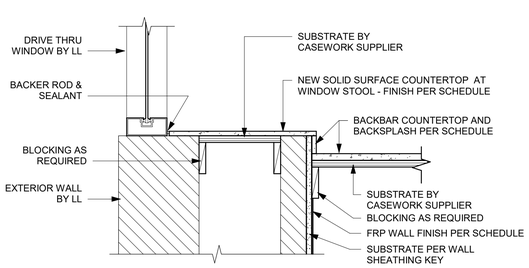

06 FINISH DETAIL AT BACKBAR SILL PARTIAL WALL

Scale: 1 1/2" = 1'-0"

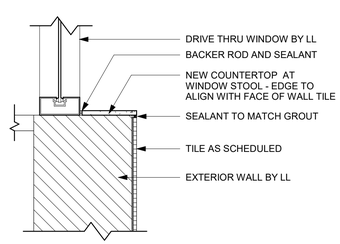

07 FINISH DETAIL AT DT SILL

Scale: 1 1/2" = 1'-0"

PERMIT SET - FOR CONSTRUCTION USE

© 2022 STARBUCKS COFFEE COMPANY

STARBUCKS®
2401 UTAH AVENUE SOUTH
SEATTLE, WASHINGTON 98134
(206) 318-1575

THESE DRAWINGS AND THE PROJECT MANUAL ARE CONFIDENTIAL AND SHALL REMAIN THE SOLE PROPERTY OF STARBUCKS CORPORATION, WHICH IS THE OWNER OF THE COPYRIGHT IN THIS WORK. THEY SHALL NOT BE REPRODUCED (IN WHOLE OR IN PART), SHARED WITH THIRD PARTIES OR USED IN ANY MANNER ON OTHER PROJECTS OR EXTENSIONS TO THIS PROJECT WITHOUT THE PRIOR WRITTEN CONSENT OF STARBUCKS CORPORATION. THESE DRAWINGS AND SPECIFICATIONS ARE INTENDED TO EXPRESS DESIGN INTENT FOR A PROTOTYPICAL STARBUCKS STORE (WHICH IS SUBJECT TO CHANGE AT ANYTIME) AND DO NOT REFLECT ACTUAL SITE CONDITIONS. NEITHER PARTY SHALL HAVE ANY OBLIGATION NOR LIABILITY TO THE OTHER (EXCEPT STATED ABOVE) UNTIL A WRITTEN AGREEMENT IS FULLY EXECUTED BY BOTH PARTIES.

STARBUCKS TEMPLATE VERSION: i2024.01.01

PABLO GARCIA, AIA, REG. FL NO. AR99297

Gensler

MAIN OFFICE
M. ARTHUR GENSLER JR. & ASSOCIATES
FL QUALIFIER'S LIC. NO. AR98486
45 FREMONT ST, SUITE 1500
SAN FRANCISCO, CA 94105 USA
Tel (415) 433.3700
Fax (415) 836.4599

SATELLITE OFFICE
M. ARTHUR GENSLER JR. & ASSOCIATES
545 NW 26TH ST
SUITE 250
MIAMI, FL 33127 USA
Tel (305) 350.7070
Fax (305) 350.7071

PROJECT NAME:
NW 43RD & 53RD

PROJECT ADDRESS:
5480 NW 43RD STREET
GAINESVILLE, FL 32653

STORE #:	10820
PROJECT #:	34769-081
ISSUE DATE:	03-22-2024
DESIGN MANAGER:	ROMINA VIGNOLO
PRODUCTION DESIGNER:	GENSLER
CHECKED BY:	GENSLER

Revision Schedule

Rev	Date	By	Description

SHEET TITLE:
CASEWORK DETAILS

SCALE: AS SHOWN

SHEET NUMBER:
I503

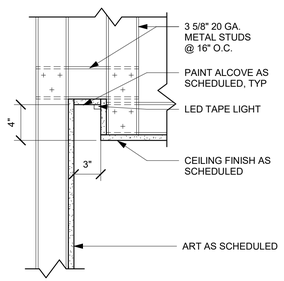

01 LIGHT COVE AT ARTWORK
Scale: 1 1/2" = 1'-0"

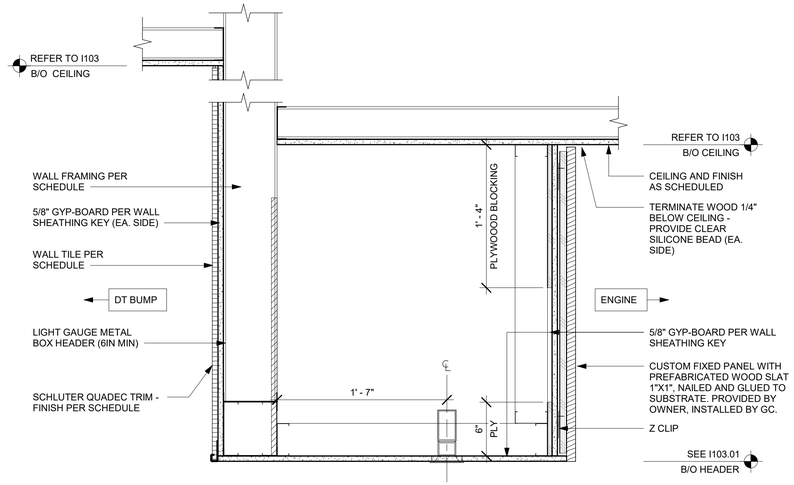

02 HEADER AT DT BUMP
Scale: 1 1/2" = 1'-0"

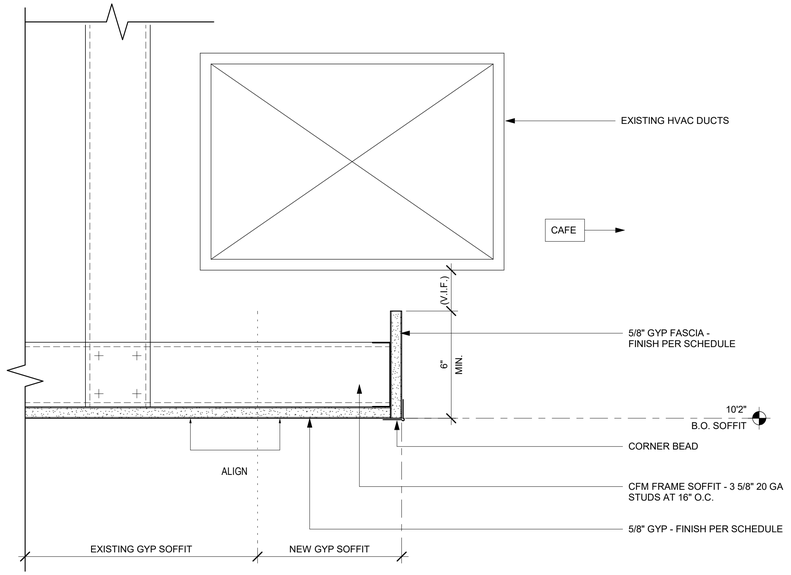

03 GYP CEILING TRANSITION AT CAFE
Scale: 3" = 1'-0"

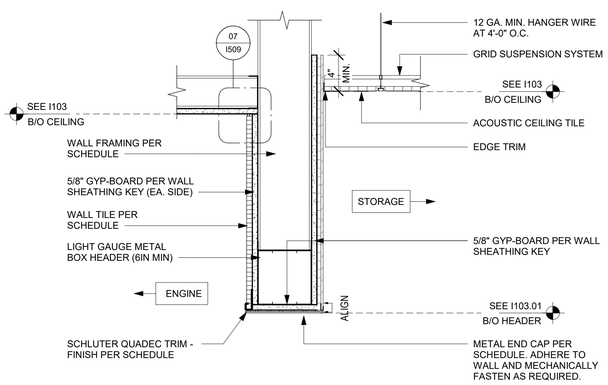

04 HEADER AT STORAGE
Scale: 1 1/2" = 1'-0"

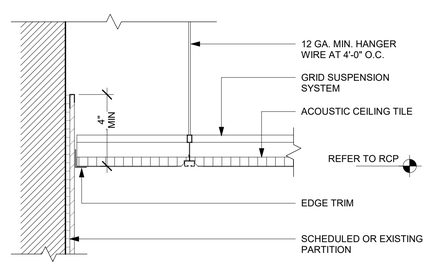

05 ACT CEILING AT POLYWALL
Scale: 3" = 1'-0"

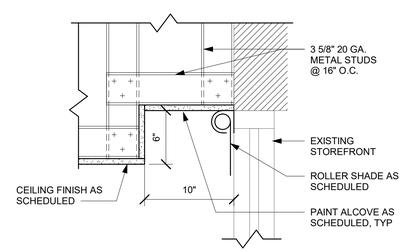

06 ROLLER SHADE COVE
Scale: 1 1/2" = 1'-0"

PERMIT SET - FOR CONSTRUCTION USE

© 2022 STARBUCKS COFFEE COMPANY

STARBUCKS®
2401 UTAH AVENUE SOUTH
SEATTLE, WASHINGTON 98134
(206) 318-1575

THESE DRAWINGS AND THE PROJECT MANUAL ARE CONFIDENTIAL AND SHALL REMAIN THE SOLE PROPERTY OF STARBUCKS CORPORATION, WHICH IS THE OWNER OF THE COPYRIGHT IN THIS WORK. THEY SHALL NOT BE REPRODUCED (IN WHOLE OR IN PART), SHARED WITH THIRD PARTIES OR USED IN ANY MANNER ON OTHER PROJECTS OR EXTENSIONS TO THIS PROJECT WITHOUT THE PRIOR WRITTEN CONSENT OF STARBUCKS CORPORATION. THESE DRAWINGS AND SPECIFICATIONS ARE INTENDED TO EXPRESS DESIGN INTENT FOR A PROTOTYPICAL STARBUCKS STORE (WHICH IS SUBJECT TO CHANGE AT ANYTIME) AND DO NOT REFLECT ACTUAL SITE CONDITIONS. NEITHER PARTY SHALL HAVE ANY OBLIGATION NOR LIABILITY TO THE OTHER (EXCEPT STATED ABOVE) UNTIL A WRITTEN AGREEMENT IS FULLY EXECUTED BY BOTH PARTIES.

STARBUCKS TEMPLATE VERSION: i2024.01.01

PABLO GARCIA, AIA, REG. FL NO. AR99297

Gensler

MAIN OFFICE
M. ARTHUR GENSLER JR. & ASSOCIATES
FL QUALIFIER'S LIC. NO. AR96486
45 FREMONT ST, SUITE 1500
SAN FRANCISCO, CA 94105 USA
Tel (415) 433.3700
Fax (415) 836.4599

SATELLITE OFFICE
M. ARTHUR GENSLER JR. & ASSOCIATES
545 NW 26TH ST
SUITE 250
MIAMI, FL 33127 USA
Tel (305) 350.7070
Fax (305) 350.7071

PROJECT NAME:
NW 43RD & 53RD

PROJECT ADDRESS:
5480 NW 43RD STREET
GAINESVILLE, FL 32653

STORE #:	10820
PROJECT #:	34769-081
ISSUE DATE:	03-22-2024
DESIGN MANAGER:	ROMINA VIGNOLO
PRODUCTION DESIGNER:	GENSLER
CHECKED BY:	GENSLER

Revision Schedule

Rev	Date	By	Description

SHEET TITLE:
RCP DETAILS

SCALE: AS SHOWN

SHEET NUMBER:
I505

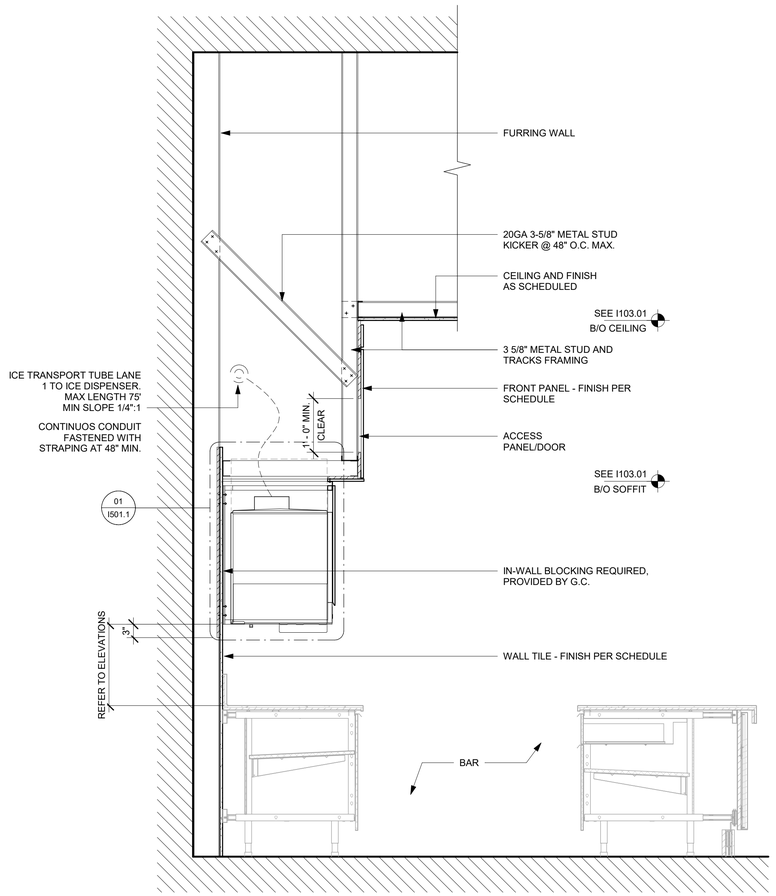

01 SOFFIT AT UPPER CABINET AT CBE

Scale: 3/4" = 1'-0"

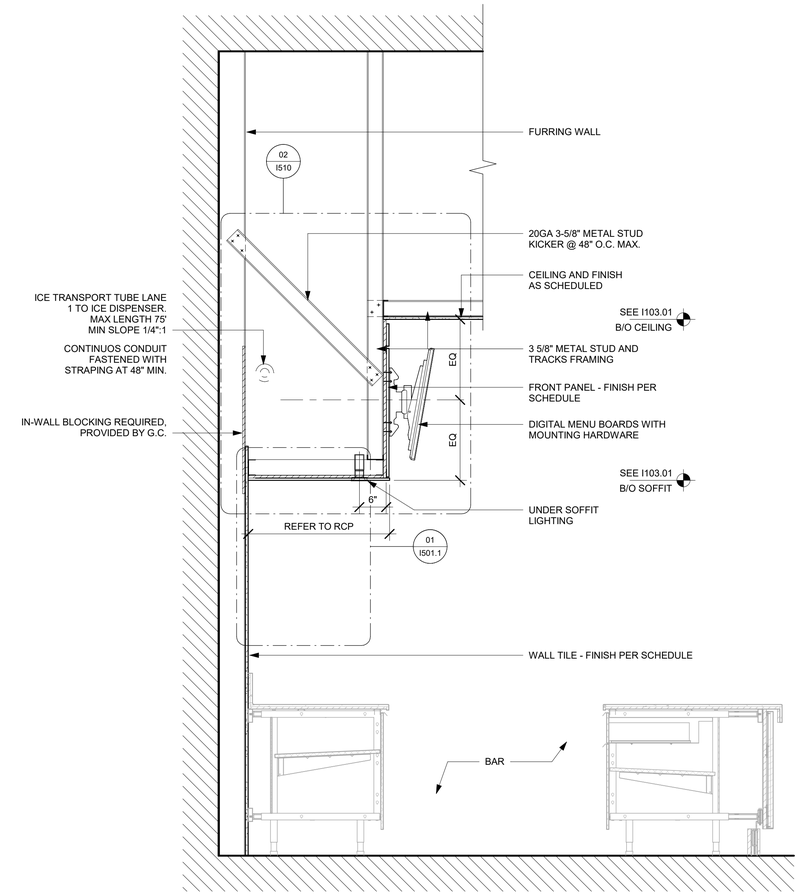

02 SOFFIT AT MENU BOARDS

Scale: 3/4" = 1'-0"

PERMIT SET - FOR CONSTRUCTION USE

© 2022 STARBUCKS COFFEE COMPANY

STARBUCKS®
2401 UTAH AVENUE SOUTH
SEATTLE, WASHINGTON 98134
(206) 318-1575

THESE DRAWINGS AND THE PROJECT MANUAL ARE CONFIDENTIAL AND SHALL REMAIN THE SOLE PROPERTY OF STARBUCKS CORPORATION, WHICH IS THE OWNER OF THE COPYRIGHT IN THIS WORK. THEY SHALL NOT BE REPRODUCED (IN WHOLE OR IN PART), SHARED WITH THIRD PARTIES OR USED IN ANY MANNER ON OTHER PROJECTS OR EXTENSIONS TO THIS PROJECT WITHOUT THE PRIOR WRITTEN CONSENT OF STARBUCKS CORPORATION. THESE DRAWINGS AND SPECIFICATIONS ARE INTENDED TO EXPRESS DESIGN INTENT FOR A PROTOTYPICAL STARBUCKS STORE (WHICH IS SUBJECT TO CHANGE AT ANYTIME) AND DO NOT REFLECT ACTUAL SITE CONDITIONS. NEITHER PARTY SHALL HAVE ANY OBLIGATION NOR LIABILITY TO THE OTHER (EXCEPT STATED ABOVE) UNTIL A WRITTEN AGREEMENT IS FULLY EXECUTED BY BOTH PARTIES.

STARBUCKS TEMPLATE VERSION: i2024.01.01

PABLO GARCIA, AIA, REG. FL NO. AR99297

Gensler

MAIN OFFICE
M. ARTHUR GENSLER JR. & ASSOCIATES
FL QUALIFIER'S LIC. NO. AR96486
45 FREMONT ST, SUITE 1500
SAN FRANCISCO, CA 94105 USA
Tel (415) 433.3700
Fax (415) 836.4599

SATELLITE OFFICE
M. ARTHUR GENSLER JR. & ASSOCIATES
545 NW 26TH ST
SUITE 250
MIAMI, FL 33127 USA
Tel (305) 350.7070
Fax (305) 350.7071

PROJECT NAME:
NW 43RD & 53RD

PROJECT ADDRESS:
5480 NW 43RD STREET
GAINESVILLE, FL 32653

STORE #:	10820
PROJECT #:	34769-081
ISSUE DATE:	03-22-2024
DESIGN MANAGER:	ROMINA VIGNOLO
PRODUCTION DESIGNER:	GENSLER
CHECKED BY:	GENSLER

Revision Schedule

Rev	Date	By	Description

SHEET TITLE:
RCP DETAILS

SCALE: AS SHOWN

SHEET NUMBER:
I506

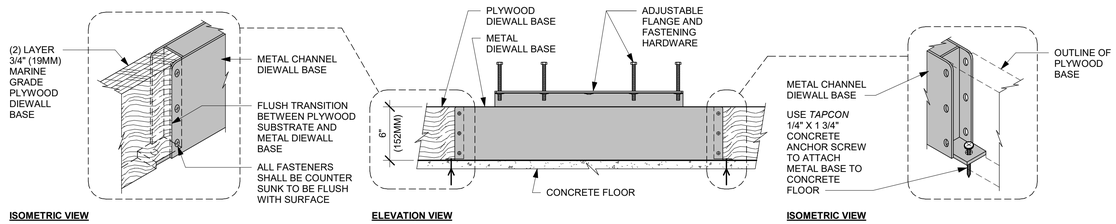

ADAPTABLE CASEWORK FLOORING DETAIL

01 AC FRONT BAR DIEWALL METAL TO WOOD BASE TRANSITION

Scale: 1 1/2" = 1'-0"

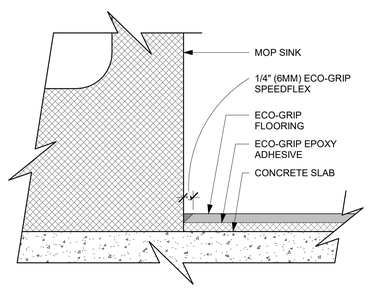

03 ECO-GRIP AT MOP SINK

Scale: 12" = 1'-0"

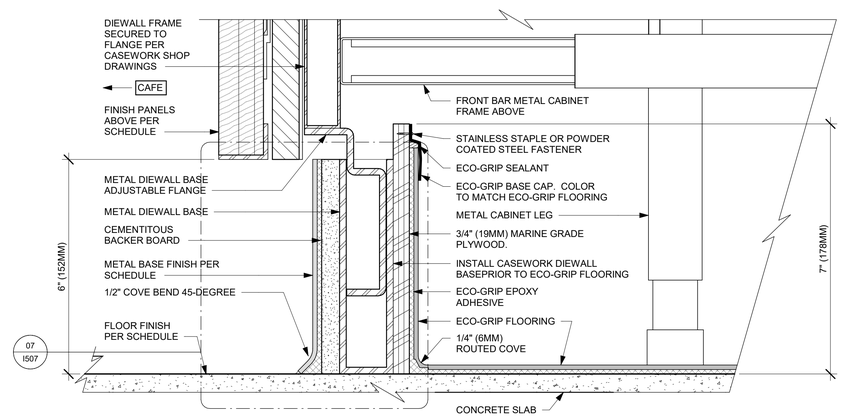

04 ECO-GRIP AC FRONT BAR CABINET ON LEGS

Scale: 6" = 1'-0"

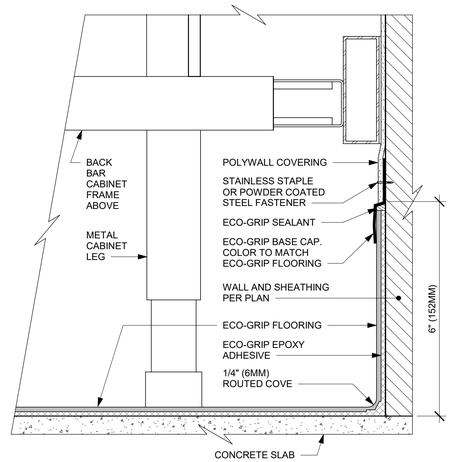

05 ECO-GRIP AC BACK BAR CABINET ON LEGS

Scale: 6" = 1'-0"

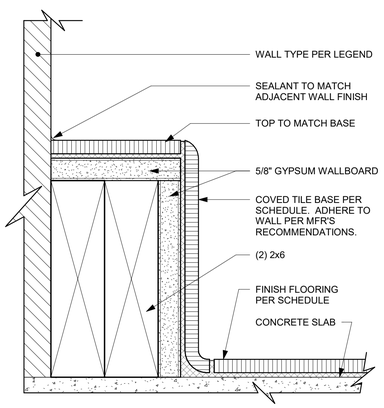

06 WALL PROTECTION AT ARTWALL

Scale: 6" = 1'-0"

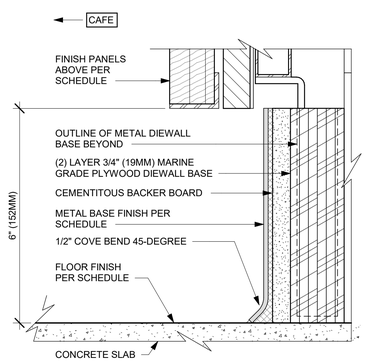

07 AC FRONT BAR CABINET PLYWOOD DIEWALL BASE

Scale: 6" = 1'-0"

PERMIT SET - FOR CONSTRUCTION USE

© 2022 STARBUCKS COFFEE COMPANY

STARBUCKS®
2401 UTAH AVENUE SOUTH
SEATTLE, WASHINGTON 98134
(206) 318-1575

THESE DRAWINGS AND THE PROJECT MANUAL ARE CONFIDENTIAL AND SHALL REMAIN THE SOLE PROPERTY OF STARBUCKS CORPORATION, WHICH IS THE OWNER OF THE COPYRIGHT IN THIS WORK. THEY SHALL NOT BE REPRODUCED (IN WHOLE OR IN PART), SHARED WITH THIRD PARTIES OR USED IN ANY MANNER ON OTHER PROJECTS OR EXTENSIONS TO THIS PROJECT WITHOUT THE PRIOR WRITTEN CONSENT OF STARBUCKS CORPORATION. THESE DRAWINGS AND SPECIFICATIONS ARE INTENDED TO EXPRESS DESIGN INTENT FOR A PROTOTYPICAL STARBUCKS STORE (WHICH IS SUBJECT TO CHANGE AT ANYTIME) AND DO NOT REFLECT ACTUAL SITE CONDITIONS. NEITHER PARTY SHALL HAVE ANY OBLIGATION NOR LIABILITY TO THE OTHER (EXCEPT STATED ABOVE) UNTIL A WRITTEN AGREEMENT IS FULLY EXECUTED BY BOTH PARTIES.

STARBUCKS TEMPLATE VERSION: i2024.01.01

PABLO GARCIA, AIA, REG. FL NO. AR99297

Gensler

MAIN OFFICE
M. ARTHUR GENSLER JR. & ASSOCIATES
FL QUALIFIERS LIC. NO. AR98486
45 FREMONT ST, SUITE 1500
SAN FRANCISCO, CA 94105 USA
Tel (415) 433.3700
Fax (415) 836.4599

SATELLITE OFFICE
M. ARTHUR GENSLER JR. & ASSOCIATES
540 NW 26TH ST
SUITE 250
MIAMI, FL 33127 USA
Tel (305) 350.7070
Fax (305) 350.7071

PROJECT NAME:
NW 43RD & 53RD

PROJECT ADDRESS:
5480 NW 43RD STREET
GAINESVILLE, FL 32653

STORE #:	10820
PROJECT #:	34769-081
ISSUE DATE:	03-22-2024
DESIGN MANAGER:	ROMINA VIGNOLO
PRODUCTION DESIGNER:	GENSLER
CHECKED BY:	GENSLER

Revision Schedule

Rev	Date	By	Description

SHEET TITLE:
FLOOR FINISH DETAILS

SCALE: AS SHOWN

SHEET NUMBER:
I507

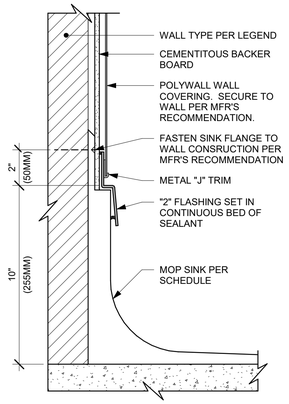

01 MOP SINK WITH FLANGE
Scale: 3" = 1'-0"

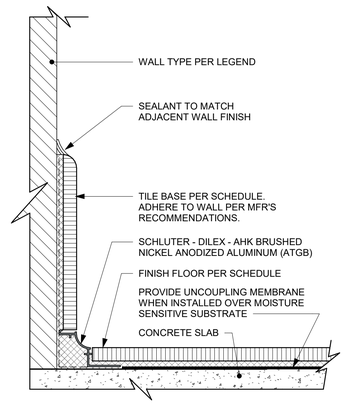

02 TILE BASE AT WALL
Scale: 6" = 1'-0"

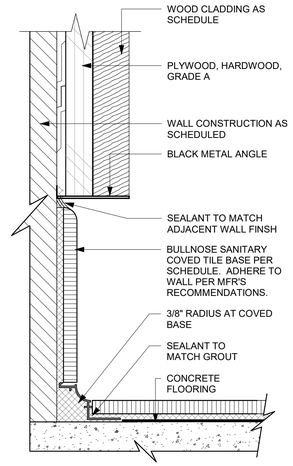

03 TOP SET - TILE BASE AT WOOD WALL
Scale: 6" = 1'-0"

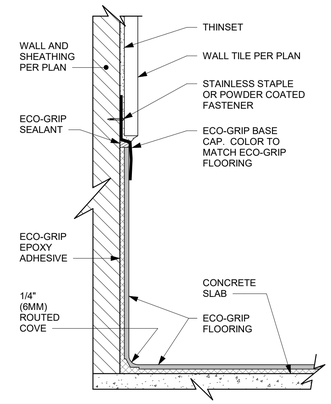

04 ECO-GRIP BASE CAP WITH TILED WALL
Scale: 6" = 1'-0"

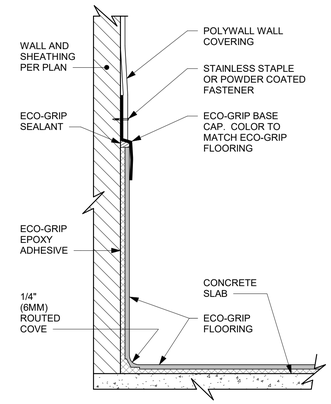

05 ECO-GRIP BASE CAP WITH POLYWALL
Scale: 6" = 1'-0"

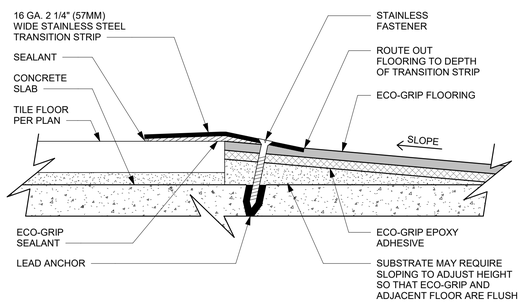

06 ECO-GRIP TO TILE TRANSITION AT FOOT TRAFFIC AREA
Scale: 12" = 1'-0"

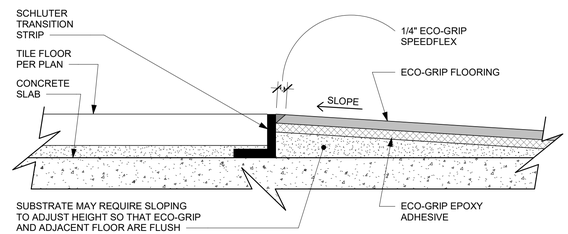

THIS DETAIL APPLIES TO FLOOR AREAS BELOW FIXTURES AND EQUIPMENT ONLY

07 ECO-GRIP TO TILE TRANSITION (FIXTURES & EQUIPMENT)
Scale: 12" = 1'-0"

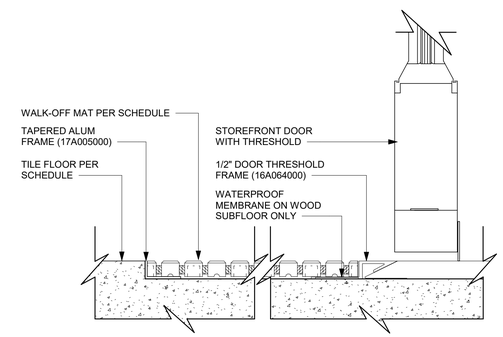

08 WALK OFF MAT - HELIX
Scale: 6" = 1'-0"

PERMIT SET - FOR CONSTRUCTION USE

© 2022 STARBUCKS COFFEE COMPANY

STARBUCKS®
2401 UTAH AVENUE SOUTH
SEATTLE, WASHINGTON 98134
(206) 318-1575

THESE DRAWINGS AND THE PROJECT MANUAL ARE CONFIDENTIAL AND SHALL REMAIN THE SOLE PROPERTY OF STARBUCKS CORPORATION, WHICH IS THE OWNER OF THE COPYRIGHT IN THIS WORK. THEY SHALL NOT BE REPRODUCED (IN WHOLE OR IN PART), SHARED WITH THIRD PARTIES OR USED IN ANY MANNER ON OTHER PROJECTS OR EXTENSIONS TO THIS PROJECT WITHOUT THE PRIOR WRITTEN CONSENT OF STARBUCKS CORPORATION. THESE DRAWINGS AND SPECIFICATIONS ARE INTENDED TO EXPRESS DESIGN INTENT FOR A PROTOTYPICAL STARBUCKS STORE (WHICH IS SUBJECT TO CHANGE AT ANYTIME) AND DO NOT REFLECT ACTUAL SITE CONDITIONS. NEITHER PARTY SHALL HAVE ANY OBLIGATION NOR LIABILITY TO THE OTHER (EXCEPT STATED ABOVE) UNTIL A WRITTEN AGREEMENT IS FULLY EXECUTED BY BOTH PARTIES.

STARBUCKS TEMPLATE VERSION: i2024.01.01

PABLO GARCIA, AIA, REG. FL NO. AR99297

Gensler

MAIN OFFICE
M. ARTHUR GENSLER JR. & ASSOCIATES
FL QUALIFIER'S LIC. NO. AR96486
45 FREMONT ST, SUITE 1500
SAN FRANCISCO, CA 94105 USA
Tel (415) 433.3700
Fax (415) 836.4599

SATELLITE OFFICE
M. ARTHUR GENSLER JR. & ASSOCIATES
540 NW 26TH ST
SUITE 250
MIAMI, FL 33127 USA
Tel (305) 350.7070
Fax (305) 350.7071

PROJECT NAME:
NW 43RD & 53RD

PROJECT ADDRESS:
5480 NW 43RD STREET
GAINESVILLE, FL 32653

STORE #:	10820
PROJECT #:	34769-081
ISSUE DATE:	03-22-2024
DESIGN MANAGER:	ROMINA VIGNOLO
PRODUCTION DESIGNER:	GENSLER
CHECKED BY:	GENSLER

Revision Schedule

Rev	Date	By	Description

SHEET TITLE:
FLOOR FINISH DETAILS

SCALE: AS SHOWN

SHEET NUMBER:
I508

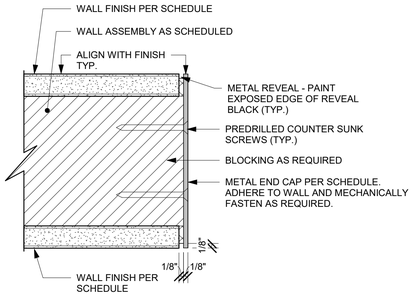

01 METAL TRIM AT BOH & ENGINE OPENING
Scale: 6" = 1'-0"

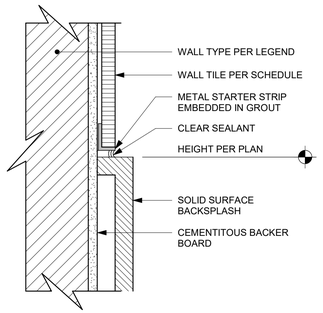

02 SS BACKSPLASH TO TILE TRANSITION
Scale: 6" = 1'-0"

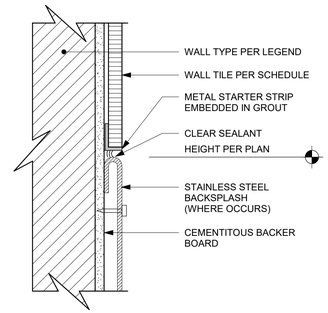

03 SS BACKSPLASH TO TILE TRANSITION
Scale: 6" = 1'-0"

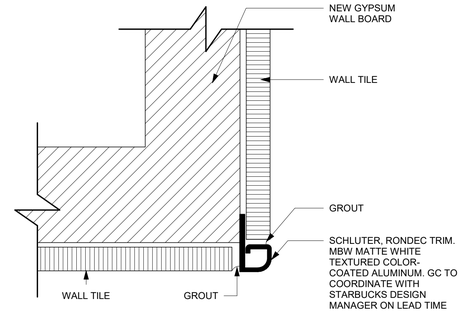

04 SCHLUTER DETAIL AT CORNER
Scale: 1/4" = 1'-0"

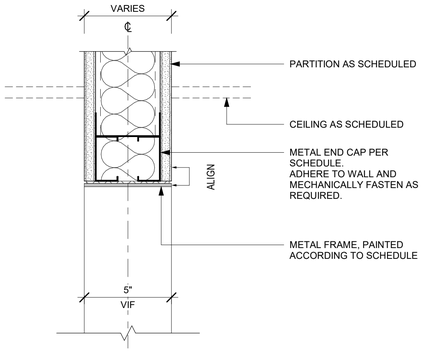

05 DOORWAY WITH METAL TRIM - FRAME HEAD
Scale: 3" = 1'-0"

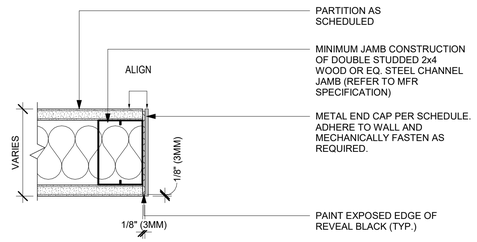

06 DOORWAY WITH METAL TRIM - FRAME JAMB
Scale: 3" = 1'-0"

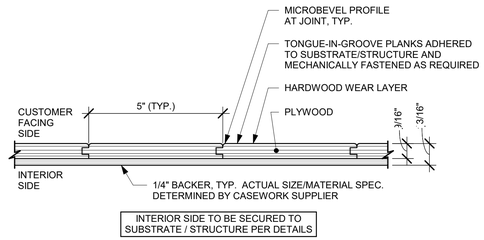

A ENLARGED SECTION PROFILE
NOT TO SCALE

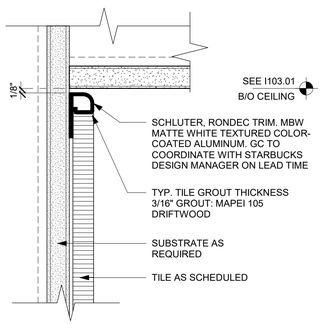

07 TILE TOP TRIM AT CEILING TRANSITION
Scale: 6" = 1'-0"

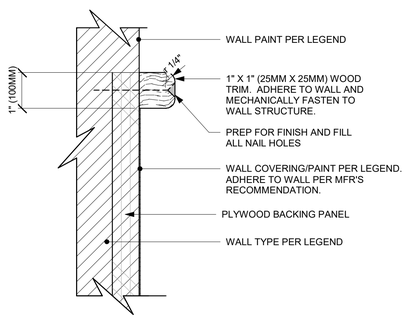

08 WOOD TRIM TRANSITION
Scale: 6" = 1'-0"

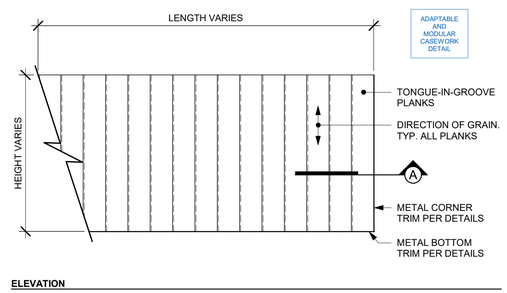

ELEVATION

11 FINISH APPLICATION (MAD 100-V) FIXED WIDTH WIDE PLANK
Scale: 3/4" = 1'-0"

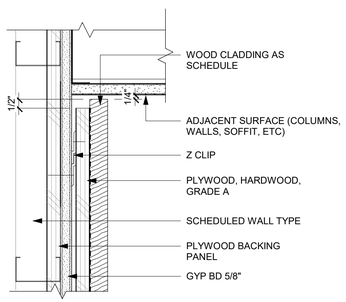

09 WOOD CLADDING WALL - SECTION
Scale: 3" = 1'-0"

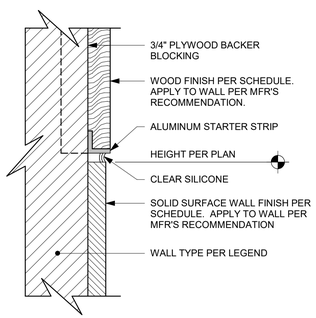

10 SS WALL TO WOOD TRANSITION
Scale: 6" = 1'-0"

PERMIT SET - FOR CONSTRUCTION USE

© 2022 STARBUCKS COFFEE COMPANY

STARBUCKS®
2401 UTAH AVENUE SOUTH
SEATTLE, WASHINGTON 98134
(206) 318-1575

THESE DRAWINGS AND THE PROJECT MANUAL ARE CONFIDENTIAL AND SHALL REMAIN THE SOLE PROPERTY OF STARBUCKS CORPORATION, WHICH IS THE OWNER OF THE COPYRIGHT IN THIS WORK. THEY SHALL NOT BE REPRODUCED (IN WHOLE OR IN PART), SHARED WITH THIRD PARTIES OR USED IN ANY MANNER ON OTHER PROJECTS OR EXTENSIONS TO THIS PROJECT WITHOUT THE PRIOR WRITTEN CONSENT OF STARBUCKS CORPORATION. THESE DRAWINGS AND SPECIFICATIONS ARE INTENDED TO EXPRESS DESIGN INTENT FOR A PROTOTYPICAL STARBUCKS STORE (WHICH IS SUBJECT TO CHANGE AT ANYTIME) AND DO NOT REFLECT ACTUAL SITE CONDITIONS. NEITHER PARTY SHALL HAVE ANY OBLIGATION NOR LIABILITY TO THE OTHER (EXCEPT STATED ABOVE) UNTIL A WRITTEN AGREEMENT IS FULLY EXECUTED BY BOTH PARTIES.

STARBUCKS TEMPLATE VERSION: i2024.01.01

PABLO GARCIA, AIA, REG. FL NO. AR99297

Gensler
MAIN OFFICE
M. ARTHUR GENSLER JR. & ASSOCIATES
FL QUALIFIER'S LIC. NO. AR96486
40 FREMONT ST, SUITE 1500
SAN FRANCISCO, CA 94105 USA
Tel (415) 433.3700
Fax (415) 836.4599

SATELLITE OFFICE
M. ARTHUR GENSLER JR. & ASSOCIATES
545 NW 26TH ST
SUITE 250
MIAMI, FL 33127 USA
Tel (305) 350.7070
Fax (305) 350.7071

PROJECT NAME: NW 43RD & 53RD

PROJECT ADDRESS: 5480 NW 43RD STREET GAINESVILLE, FL 32653

STORE #:	10820
PROJECT #:	34769-081
ISSUE DATE:	03-22-2024
DESIGN MANAGER:	ROMINA VIGNOLO
PRODUCTION DESIGNER:	GENSLER
CHECKED BY:	GENSLER

Revision Schedule

Rev	Date	By	Description

SHEET TITLE:
WALL FINISH DETAILS

SCALE: AS SHOWN

SHEET NUMBER:
I509

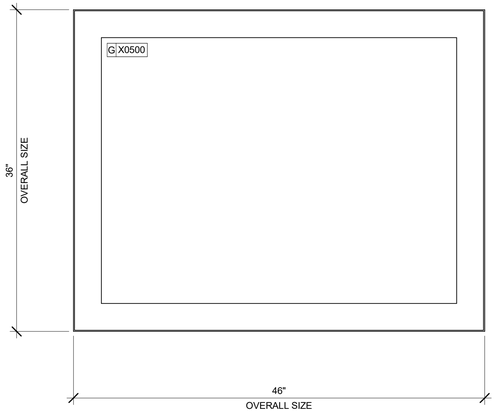

01 ARTWORK X0500
Scale: 1 1/2" = 1'-0"

DID: X0500
COMMUNITY BOARD
STARBUCKS ART: VENDOR - COLOR CHROME

OVERALL SIZE: 46"W X 36"H
FRAME TYPE: 1C - LARSON-JUHL CRANBROOK 1&2
613677 NATURAL MAPLE

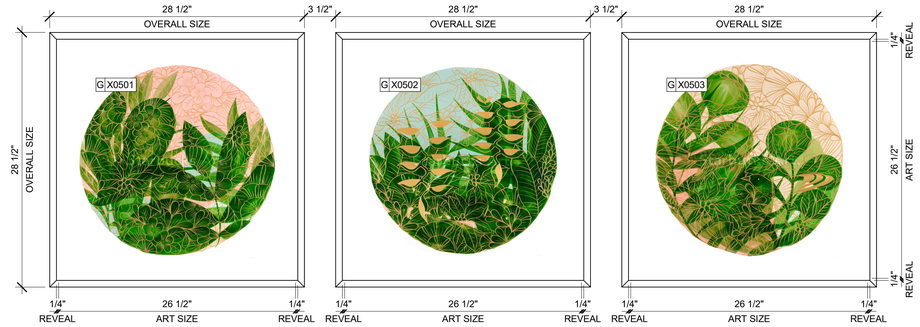

02 ARTWORK X0502, X0503,X0504
Scale: 1 1/2" = 1'-0"

DID: 22678

ARTIST: MARIA CAMILA BERNAL TORO
TITLE: COLOMBIA FLORA 3
PAPER CUT-PAGE

FRAMED WITHOUT MAT
ART SIZE: 27"W X 27"H
REVEAL: 1/4"
OVERALL SIZE: 28 1/2"W X 28 1/2"H
PAPER: PAPER 1 - LEXJET - PREMIUM ARCHIVAL MATTE PAPER
FRAME TYPE: 1C - LARSON-JUHL CRANBROOK 1&2
613677 NATURAL MAPLE

DID: 22679

ARTIST: MARIA CAMILA BERNAL TORO
TITLE: COLOMBIA FLORA 4
PAPER CUT-PAGE

FRAMED WITHOUT MAT
ART SIZE: 27"W X 27"H
REVEAL: 1/4"
OVERALL SIZE: 28 1/2"W X 28 1/2"H
PAPER: PAPER 1 - LEXJET - PREMIUM ARCHIVAL MATTE PAPER
FRAME TYPE: 1C - LARSON-JUHL CRANBROOK 1&2
613677 NATURAL MAPLE

DID: 22711

ARTIST: MARIA CAMILA BERNAL TORO
TITLE: COLOMBIA FLORA 2
PAPER CUT-PAGE

FRAMED WITHOUT MAT
ART SIZE: 27"W X 27"H
REVEAL: 1/4"
OVERALL SIZE: 28 1/2"W X 28 1/2"H
PAPER: PAPER 1 - LEXJET - PREMIUM ARCHIVAL MATTE PAPER
FRAME TYPE: 1C - LARSON-JUHL CRANBROOK 1&2
613677 NATURAL MAPLE

PERMIT SET - FOR CONSTRUCTION USE

© 2022 STARBUCKS COFFEE COMPANY

STARBUCKS®
2401 UTAH AVENUE SOUTH
SEATTLE, WASHINGTON 98134
(206) 318-1575

THESE DRAWINGS AND THE PROJECT MANUAL ARE CONFIDENTIAL AND SHALL REMAIN THE SOLE PROPERTY OF STARBUCKS CORPORATION, WHICH IS THE OWNER OF THE COPYRIGHT IN THIS WORK. THEY SHALL NOT BE REPRODUCED (IN WHOLE OR IN PART), SHARED WITH THIRD PARTIES OR USED IN ANY MANNER ON OTHER PROJECTS OR EXTENSIONS TO THIS PROJECT WITHOUT THE PRIOR WRITTEN CONSENT OF STARBUCKS CORPORATION. THESE DRAWINGS AND SPECIFICATIONS ARE INTENDED TO EXPRESS DESIGN INTENT FOR A PROTOTYPICAL STARBUCKS STORE (WHICH IS SUBJECT TO CHANGE AT ANYTIME) AND DO NOT REFLECT ACTUAL SITE CONDITIONS. NEITHER PARTY SHALL HAVE ANY OBLIGATION NOR LIABILITY TO THE OTHER (EXCEPT STATED ABOVE) UNTIL A WRITTEN AGREEMENT IS FULLY EXECUTED BY BOTH PARTIES.

STARBUCKS TEMPLATE VERSION: i2024.01.01

PABLO GARCIA, AIA, REG. FL NO. AR99297

Gensler

MAIN OFFICE
M. ARTHUR GENSLER JR. & ASSOCIATES
FL QUALIFIER'S LIC. NO. AR96486
40 FREMONT ST, SUITE 1500
SAN FRANCISCO, CA 94105 USA
Tel (415) 433.3700
Fax (415) 836.4599

SATELLITE OFFICE
M. ARTHUR GENSLER JR. & ASSOCIATES
545 NW 26TH ST
SUITE 250
MIAMI, FL 33127 USA
Tel (305) 350.7070
Fax (305) 350.7071

PROJECT NAME:
NW 43RD & 53RD

PROJECT ADDRESS:
5480 NW 43RD STREET
GAINESVILLE, FL 32653

STORE #:	10820
PROJECT #:	34769-081
ISSUE DATE:	03-22-2024
DESIGN MANAGER:	ROMINA VIGNOLO
PRODUCTION DESIGNER:	GENSLER
CHECKED BY:	GENSLER

Revision Schedule

Rev	Date	By	Description

SHEET TITLE:
ARTWORK

SCALE: AS SHOWN

SHEET NUMBER:
I511

01 ARTWORK X0504
Scale: 1 1/2" = 1'-0"

DID: 22914

ARTIST: MARIA CAMILA BERNAL TORO
TITLE: COLOMBIA COFFEE LANDSCAPE
STARBUCKS ART: VENDOR-COLORCHROME

WALL COVERING ART PRINT
OVERALL SIZE: 164"W X 129"H

PERMIT SET - FOR CONSTRUCTION USE

© 2022 STARBUCKS COFFEE COMPANY

STARBUCKS®
2401 UTAH AVENUE SOUTH
SEATTLE, WASHINGTON 98134
(206) 318-1575

THESE DRAWINGS AND THE PROJECT MANUAL ARE CONFIDENTIAL AND SHALL REMAIN THE SOLE PROPERTY OF STARBUCKS CORPORATION, WHICH IS THE OWNER OF THE COPYRIGHT IN THIS WORK. THEY SHALL NOT BE REPRODUCED (IN WHOLE OR IN PART), SHARED WITH THIRD PARTIES OR USED IN ANY MANNER ON OTHER PROJECTS OR EXTENSIONS TO THIS PROJECT WITHOUT THE PRIOR WRITTEN CONSENT OF STARBUCKS CORPORATION. THESE DRAWINGS AND SPECIFICATIONS ARE INTENDED TO EXPRESS DESIGN INTENT FOR A PROTOTYPICAL STARBUCKS STORE (WHICH IS SUBJECT TO CHANGE AT ANYTIME) AND DO NOT REFLECT ACTUAL SITE CONDITIONS. NEITHER PARTY SHALL HAVE ANY OBLIGATION NOR LIABILITY TO THE OTHER (EXCEPT STATED ABOVE) UNTIL A WRITTEN AGREEMENT IS FULLY EXECUTED BY BOTH PARTIES.

STARBUCKS TEMPLATE VERSION: i2024.01.01

PABLO GARCIA, AIA, REG. FL NO. AR99297

Gensler

MAIN OFFICE
M. ARTHUR GENSLER JR. & ASSOCIATES
FL QUALIFIER'S LIC. NO. AR98486
45 FREMONT ST, SUITE 1500
SAN FRANCISCO, CA 94105 USA
Tel (415) 433.3700
Fax (415) 836.4599

SATELLITE OFFICE
M. ARTHUR GENSLER JR. & ASSOCIATES
545 NW 26TH ST
SUITE 250
MIAMI, FL 33127 USA
Tel (305) 350.7070
Fax (305) 350.7071

PROJECT NAME:
NW 43RD & 53RD

PROJECT ADDRESS:
5480 NW 43RD STREET
GAINESVILLE, FL 32653

STORE #:	10820
PROJECT #:	34769-081
ISSUE DATE:	03-22-2024
DESIGN MANAGER:	ROMINA VIGNOLO
PRODUCTION DESIGNER:	GENSLER
CHECKED BY:	GENSLER

Revision Schedule

Rev	Date	By	Description

SHEET TITLE:
ARTWORK

SCALE: AS SHOWN

SHEET NUMBER:
I511.1

CASEWORK SCHEDULE - "C"

DESIGN ID	COUNT	DESCRIPTION	FURN. BY	INST. BY	COMMENTS
CABINET					
19281	2	CABINET - ESPRESSO ICE BIN STAINLESS - 20IN 510MM	SB	GC	
21889	5	CABINET - BOX BASE - VARIABLE LENGTH	SB	GC	
21890	33	CABINET - SIDE PANEL	SB	GC	
21891	14	CABINET - BOTTOM SHELF - 15IN 380MM	SB	GC	
21892	11	CABINET - BACK PANEL - 15IN 380MM	SB	GC	
21893	8	CABINET - ADJUSTABLE SHELF - 15IN 380MM	SB	GC	
21894	8	CABINET - DOOR - 15IN 380MM	SB	GC	
21895	7	CABINET - DOOR TRASH - 15IN 380MM	SB	GC	
21896	2	CABINET - DRAWER - 15IN 380MM	SB	GC	
21898	2	CABINET - BOTTOM SHELF - 18IN 455MM	SB	GC	
21899	2	CABINET - BACK PANEL - 18IN 455MM	SB	GC	
21900	1	CABINET - ADJUSTABLE SHELF - 18IN 455MM	SB	GC	
21901	2	CABINET - DOOR - 18IN 455MM	SB	GC	
21902	4	CABINET - BOTTOM SHELF - 30IN 760MM	SB	GC	
21903	1	CABINET - BACK PANEL - 30IN 760MM	SB	GC	
21904	7	CABINET - ADJUSTABLE SHELF - 30IN 760MM	SB	GC	
21905	1	CABINET - DOOR - 30IN 760MM	SB	GC	
21906	1	CABINET - END CAP FRONTBAR	SB	GC	
21907	4	CABINET - END CAP BACKBAR	SB	GC	
21908	3	CABINET - FILLER PANEL - VARIABLE LENGTH	SB	GC	
21909	1	CABINET - DT POS UPPER CUBBY - 32IN 815MM	SB	GC	
21910	1	CABINET - FRENCH CLEAT - VARIABLE LENGTH	SB	GC	DESIGNER TO VERIFY QUANTITY, PROVIDE OVERALL LENGTH REQUIRED.
21912	3	CABINET - BACK PANEL FOR POS - 30IN 760MM	SB	GC	
21913	2	CABINET - EQUIPMENT MOUNTING PANEL	SB	GC	
22749	1	CABINET - ESPRESSO PUMP MOUNT PANEL	SB	GC	
22986	2	CABINET - DELIVERY DRAWER - 15IN 380MM	SB	GC	
23387	1	CABINET - SOFFIT - VARIABLE LENGTH	SB	GC	
23425	2	CABINET - WRM DOOR LOWERED COUNTER - 15IN 380MM	SB	GC	
CABINETS					
23711	1	CABINET - CBE UPPER CASEWORK IN-LINE - RF - 82IN	SB	GC	FINISH LAMINATE SOLICOR KHAKI BROWN MATTE
CAFE					
20386	1	FREESTANDING INLINE 3 UNIT SHORT - 72IN 1830MM - WHITE OAK WD0073	SB	GC	
23964	1	WASTE AND RECYCLE STATION THREE DROP - GOLDEN BLONDE AND WHITE PL0027 CP0002	SB	GC	
COUNTERTOP					
21918	1	COUNTERTOP - FILLER FRONTBAR - VARIABLE LENGTH	SB	GC	
21919	8	COUNTERTOP - FILLER BACKBAR - VARIABLE LENGTH	<varies>	<varies>	
21923	1	COUNTERTOP - END CAP FRONTBAR	SB	GC	
21925	1	COUNTERTOP - BACKBAR - 15IN 380MM	SB	GC	
21926	1	COUNTERTOP - BACKBAR - 18IN 455MM	SB	GC	
21928	4	COUNTERTOP - END CAP BACKBAR	SB	GC	
22328	1	COUNTERTOP - BREW - LF - 90IN 2285MM	SB	GC	
22352	1	COUNTERTOP - ESPRESSO FRONTBAR - LF - 141IN 3580MM	SB	GC	
22354	1	COUNTERTOP - ESPRESSO SHROUD - 141IN 3580MM	SB	GC	
22361	1	COUNTERTOP - POS - 84IN 2135MM	SB	GC	
22364	1	COUNTERTOP - DT POS - LF - 94IN 2390MM	SB	GC	
22385	1	COUNTERTOP - WARMING WITH RACK - RF - 110IN 2795MM	SB	GC	

SPECIALTY EQUIPMENT SCHEDULE - "E"

DESIGN ID	COUNT	DESCRIPTION	FURN. BY	INST. BY	COMMENTS
COOLING					
10267	1	FRIDGE UNDERCOUNTER 1 DOOR - 27IN 685MM	SB	GC	
EQUIPMENT					
17564	1	BLENDER PITCHER RINSER WITH SENSOR	SB	GC	
21679	1	NITROGEN GENERATOR ELEMENT COMPACT	SB	GC	
22885	1	BREWER CLOVER VERTICA DOUBLE	SB	GC	
23380	1	BREWER CLOVER VERTICA INSTALL KIT	SB	GC	
23381	1	BREWER CLOVER VERTICA CORD	SB	GC	
23393	3	EQUIPMENT - CBE MILK DISPENSE BRACKET SLIDE	SB	GC	
23419	3	MILK DISPENSER	SB	GC	
23443	1	OVEN COMBI	SB	GC	
FAN					
X1000	1	FAN - OVEN HOOD CONVOTHERM COMBI	SB	GC	
FOOD CASE					
21215	1	FOOD CASE - ZEPHYR - 28IN 710MM	SB	GC	
23440	1	FOOD CASE - WARMING WALL - 1000 SQUARE	SB	GC	
ICE					
18029	1	ICE - BIN B110	SB	GC	BPF-1 ADAPTER KIT (011076103) REQUIRED WHEN PAIRING WITH 30" (760MM) ICE MACHINES
19278	2	ICE - BIN DROP IN 45LB 20KG HORIZONTAL	SB	GC	
23181	1	ICE - MACHINE HMD2110RBT REMOTE COOLED	SB	GC	
23421	1	ICE - NUGGET ICE DISPENSER - SINGLE ICE MACHINE	SB	GC	
23423	1	ICE - NUGGET ICE DIVERTER	SB	GC	
23424	1	ICE - NUGGET ICE DIVERTER CONTROL PANEL	SB	GC	
23526	1	ICE - BIN ADAPTOR FOLLETT B110H22H30DV PEDESTAL FOR B110	SB	GC	GC TO COORD. W/ SB VENDOR
OTHER					
10091	1	CUP DISPENSER TALL HOT VERTICAL	SB	GC	
10396	1	CUP DISPENSER SHORT HOT VERTICAL	SB	GC	
10791	2	CUP DISPENSER GRANDE VENTI COLD VERTICAL	SB	GC	
10855	2	CUP DISPENSER GRANDE VENTI HOT VERTICAL	SB	GC	
10858	1	CUP DISPENSER TALL COLD VERTICAL	SB	GC	
10992	2	PAPER TOWEL DISPENSER HALF SIZE - TRANSLUCENT GRAY	SB	GC	
11115	2	SOAP DISPENSER SINK MOUNTED	SB	GC	
13330	1	MOBILE CUP DISPENSER CADDY	SB	GC	
13584	1	CUP DISPENSER TRENTA COLD VERTICAL	SB	GC	
21554	10	POWER EXTENSION DUAL RECEPTACLE AND USB SURFACE MOUNT - BLACK	SB	GC	
22627	1	NITRO 2 TAP HANDLE WITH BADGE AND MOUNT KIT	SB	GC	JOE TAP, FOR USE AT BACKBAR NITRO FONT
23420	2	REFRESHER DISPENSE SMALL	SB	GC	
STORAGE					
17264	1	ROLLING PASTRY TRAY THAW RACK - 20X26IN 510X660MM	SB	GC	
21934	1	PASTRY TRAY RACK UNDERCOUNTER - 30IN 760MM	SB	GC	
23445	3	PASTRY COOLING RACK WALL MOUNTED	SB	GC	
TK0048	2	5 COMP LOCKER - 15IN 380MM	SB	GC	

CASEWORK SCHEDULE - "C"

DESIGN ID	COUNT	DESCRIPTION	FURN. BY	INST. BY	COMMENTS
22390	1	COUNTERTOP - CONSOLIDATED HANDOFF - RF - 45IN 1145MM	SB	GC	
22394	3	COUNTERTOP - BACKSPLASH - VARIABLE LENGTH	SB	GC	
22395	2	COUNTERTOP - HAND SINK LOW SPLASH - 15IN 380MM	SB	GC	
22407	1	COUNTERTOP - CORNER FRONTBAR ROUNDED	SB	GC	
22979	1	COUNTERTOP - FRONTBAR - 45IN 1145MM	SB	GC	
23403	1	COUNTERTOP - CBE IN-LINE RF - 139IN 3530MM	SB	GC	
23430	1	COUNTERTOP - WRM RF - 78IN 1980MM	SB	GC	
DIEWALL					
21885	17	DIEWALL - FRAMING - VARIABLE LENGTH	SB	GC	
21886	6	DIEWALL - BASE - VARIABLE LENGTH	SB	GC	
21887	5	DIEWALL - SUBSTRATE PANEL - VARIABLE LENGTH	SB	GC	
21888	48	DIEWALL - SUPPORT LEG	SB	GC	
22408	1	DIEWALL - CORNER ROUNDED	SB	GC	
23439	1	DIEWALL - WRM STRUCTURE LOWERED COUNTER	SB	GC	
OTHER					
11155	2	ESPRESSO MACHINE PUMP MOUNT - 10X10IN 255X255MM	SB	GC	
21914	8	FRIDGE STOP BRACKET SET	SB	GC	
X0001	1	METAL CAP - 6X1/8IN 152X3MM	CV	GC	MATERIAL: ALUMINIUM. FINISH: MT0028. GC TO VERIFY ALL DIMENSIONS AND NOTIFY SB/VD ANY DISCREPANCIES. TO BE PROVIDED BY CASEWORK VENDOR
X0002	1	METAL CAP - 5X1/8IN 127X3MM	CV	GC	MATERIAL: ALUMINIUM. FINISH: MT0028. GC TO VERIFY ALL DIMENSIONS AND NOTIFY SB/VD ANY DISCREPANCIES. TO BE PROVIDED BY CASEWORK VENDOR
X0004	1	DECORATIVE METAL TRIM - 5X1/8IN 127X3MM	SV	GC	MATERIAL: ALUMINIUM. FINISH: POWDERCOATED FLAT BLACK MT0028. GC TO VERIFY ALL DIMENSIONS AND NOTIFY SB/VD ANY DISCREPANCIES. TO BE PROVIDED BY CASEWORK VENDOR
X0005	1	CUSTOM WOOD PANEL SLATS 1X1IN - 18.5X1IN 470X38MM (V.I.F.) - WHITE OAK WD0073	SB	GC	CLASS A FIRE RETARDANT TREATMENT (PER ASTM E 84), OR PASSES NFPA 286 (DID: SPC006). SELECTED GRAIN, FULL PLANK. LENGTH REQUIRED (V.I.F): 1'-6 1/2"
X0005	1	OSB HARDWOOD FRAME - 1X2IN 25X50MM (2 PIECES) - WHITE OAK WD0073	CV	GC	REFER TO DETAIL 03/I511. LENGHT TO BE VERIFIED IN FIELD BY CASEWORK VENDOR
X0006	1	CUSTOM WOOD PANEL SLATS 1X1IN - 31.5X1IN 406X38MM (V.I.F.) - WHITE OAK WD0073	SB	GC	CLASS A FIRE RETARDANT TREATMENT (PER ASTM E 84), OR PASSES NFPA 286 (DID: SPC006). SELECTED GRAIN, FULL PLANK. LENGTH REQUIRED (V.I.F): 2' 7 1/2"
X0007	1	CUSTOM WOOD PANEL SLATS 1X1IN - 16X1IN 406X38MM (V.I.F.) - WHITE OAK WD0073	SB	GC	CLASS A FIRE RETARDANT TREATMENT (PER ASTM E 84), OR PASSES NFPA 286 (DID: SPC006). SELECTED GRAIN, FULL PLANK. LENGTH REQUIRED (V.I.F): 1'-4"
X0008	1	CUSTOM WOOD PANEL SLATS 1X1IN - 31.5X1IN 406X38MM (V.I.F.) - WHITE OAK WD0073	SB	GC	CLASS A FIRE RETARDANT TREATMENT (PER ASTM E 84), OR PASSES NFPA 286 (DID: SPC006). SELECTED GRAIN, FULL PLANK. LENGTH REQUIRED (V.I.F): 2' 7 1/2"
X0009	2	PANEL - CBE SOFFIT - FIXED PANELCUSTOM SLATS 1X1IN - 11.5IN 279MM - WHITE OAK WD0073	CV	GC	REFER TO DETAIL.
X0010	1	PANEL - CBE SOFFIT - ACCESS PANEL DOOR CUSTOM SLATS 1X1IN - 17IN 431MM - WHITE OAK WD0073	CV	GC	REFER TO DETAIL.
X0011	11	PANEL - CBE SOFFIT - FIXED PANEL CUSTOM SLATS 1X1IN - 38IN 965MM - WHITE OAK WD0073	CV	GC	REFER TO DETAIL.
X0012	5	WOOD TRIM - 1X1IN 25X25MM - PAINT SW7020 BLACK FOX.	SB	GC	TO BE PROVIDED BY CASEWORK VENDOR. REQUIERED (V.I.F.): (1)3'-10", (2) 7'-6"
X0013	4	WOOD TRIM - 6 1/2X1 1/2IN 152X38MM - WHITE OAK WD0073.	SB	GC	TO BE PROVIDED BY CASEWORK VENDOR. REQUIERED (V.I.F.): (1)3'-10", (2) 7'-6"
X0014	1	METAL CAP - 5X1/8IN 127X3MM	CV	GC	MATERIAL: ALUMINIUM. FINISH: MT0028. GC TO VERIFY ALL DIMENSIONS AND NOTIFY SB/VD ANY DISCREPANCIES. TO BE PROVIDED BY CASEWORK VENDOR
X0015	1	WOOD TRIM - 6 1/2X1 1/2IN 152X38MM - WHITE OAK WD0073	CV	GC	TO BE PROVIDED BY CASEWORK VENDOR.
X0016	1	CUSTOM WOOD PANEL SLATS 1X1IN - 18.5X1IN 470X38MM (V.I.F.) - WHITE OAK WD0073	SB	GC	CLASS A FIRE RETARDANT TREATMENT (PER ASTM E 84), OR PASSES NFPA 286 (DID: SPC006). SELECTED GRAIN, FULL PLANK. LENGTH REQUIRED (V.I.F): 1'-6 1/2"
X1500	3	SCHLUTER FINEC-SQ TRIM 3/16"	GC	GC	TRIM AT TILE CORNER. MATERIAL: ALUMINIUM. FINISH: BRUSHED STAINLESS STEEL.
PANEL					
21933	5	FINISH PANEL - VARIABLE LENGTH	SB	GC	
22409	1	FINISH PANEL - CORNER ROUNDED	SB	GC	
23418	1	PANEL - CBE SOFFIT. CABINET - CBE UPPER SIDE PANEL	SB	GC	

CASEWORK FINISH SCHEDULE

ENGINE ZONE	MATERIAL DESCRIPTION	FINISH CODE	COMMENTS
COMPOSITE - MATTE BLACK MOTTLED PAPER			
CABINETS - EXTERIOR	COMPOSITE - MATTE BLACK MOTTLED PAPER	CP0024	
CABINETS - INTERIOR	COMPOSITE - MATTE BLACK MOTTLED PAPER	CP0024	
CABINETS - UPPER	COMPOSITE - MATTE BLACK MOTTLED PAPER	CP0024	
FRAMING AND HARDWARE	COMPOSITE - MATTE BLACK MOTTLED PAPER	CP0024	
COMPOSITE - WEATHERED CONCRETE			
COUNTERTOPS - BACKBAR	COMPOSITE - WEATHERED CONCRETE	CP0056	
COUNTERTOPS - ESPRESSO	COMPOSITE - WEATHERED CONCRETE	CP0056	
COUNTERTOPS - ESPRESSO SHROUD	COMPOSITE - WEATHERED CONCRETE	CP0056	
COUNTERTOPS - FRONTBAR	COMPOSITE - WEATHERED CONCRETE	CP0056	
CUSTOM PLAM - WILSONART - KHAKI BROWN D50-60 - MATTE FINISH			
CABINETS - DT POS CUBBY	CUSTOM PLAM - WILSONART - KHAKI BROWN D50-60 - MATTE FINISH	X0303	
CABINETS - EXTERIOR	CUSTOM PLAM - WILSONART - KHAKI BROWN D50-60 - MATTE FINISH	X0303	
CABINETS - UPPER	CUSTOM PLAM - WILSONART - KHAKI BROWN D50-60 - MATTE FINISH	X0303	
GWB CEILING WITH LEVEL 4 FINISH - PAINT AS SCHEDULED			
CABINETS - UPPER	GWB CEILING WITH LEVEL 4 FINISH - PAINT AS SCHEDULED	X0300	
METAL - FLAT BLACK POWDERCOAT			
FRAMING AND HARDWARE	METAL - FLAT BLACK POWDERCOAT	MT0028	
METAL - STAINLESS STEEL - BRUSHED			
CABINETS - UNDERCOUNTER ICE BIN	METAL - STAINLESS STEEL - BRUSHED	#4 BRUSHED 16GA	
COUNTERTOPS - HAND SINK	METAL - STAINLESS STEEL - BRUSHED	#4 BRUSHED 16GA	
FRAMING AND HARDWARE	METAL - STAINLESS STEEL - BRUSHED	#4 BRUSHED 16GA	
PLASTIC - BLACK HDPE			
CABINETS - INTERIOR	PLASTIC - BLACK HDPE	PL0044	
WOOD - WHITE OAK - ROUNDED SLAT - VERTICAL			
FINISH PANELS	WOOD - WHITE OAK - ROUNDED SLAT - VERTICAL	WD0073 MAD200-V	
FINISH PANELS - FRONTBAR	WOOD - WHITE OAK - ROUNDED SLAT - VERTICAL	WD0073 MAD200-V	

GRAPHICS AND ARTWORK SCHEDULE - "G"

DESIGN ID	COUNT	DESCRIPTION	FURN. BY	INST. BY	COMMENTS
GRAPHICS					
X0500	1	COMMUNITY BOARD MAGNETIC - 46X36IN	SB	GC	FRAME:1A. EBONIZED WALNUT
X0501	1	ARTWORK DID: 22678 - ART SIZE: 27X27 IN - OVERALL SIZE: 28 1/2X28 1/2 IN	SB	GC	FORMAT: FRAMED & MATTED. MAT BORDER: 3IN. MAT 1. PAPER 1. FRAME: FRAME 1C - LARSON-JUHL - CRANBROOK 1 & 2 - 613677 NATURAL MAPLE. REFER TO ART DETAIL.
X0502	1	ARTWORK DID: 22679 - ART SIZE: 27X27 IN - OVERALL SIZE: 28 1/2X28 1/2 IN	SB	GC	FORMAT: FRAMED & MATTED. MAT BORDER: 3IN. MAT 1. PAPER 1. FRAME: FRAME 1C - LARSON-JUHL - CRANBROOK 1 & 2 - 613677 NATURAL MAPLE. REFER TO ART DETAIL.
X0503	1	ARTWORK DID: 22711 - ART SIZE: 27X27 IN - OVERALL SIZE: 28 1/2X28 1/2 IN	SB	GC	FORMAT: FRAMED & MATTED. MAT BORDER: 3IN. MAT 1. PAPER 1. FRAME: FRAME 1C - LARSON-JUHL - CRANBROOK 1 & 2 - 613677 NATURAL MAPLE. REFER TO ART DETAIL.
X0504	1	ARTWORK DID: 22914 - OVERALL SIZE: 164W X124H IN	SB	GC	FORMAT: FRAMED & MATTED. MAT BORDER: 3IN. MAT 1. PAPER 1. FRAME: FRAME 1C - LARSON-JUHL - CRANBROOK 1 & 2 - 613677 NATURAL MAPLE. REFER TO ART DETAIL.
GRAPHICS - OTHER					
23136	1	AUTOMATIC DOOR CAUTION SIGNAGE	SB	GC	
X0801	2	ADA COMPLIANT HANDICAP ACCESSIBLE SIGN WITH BRAILLE - 6X9IN 152X228MM	GC	GC	FRAMELESS WITH SQUARE CORNERS, FINISH: BLACK WITH SILVER LETTERING. MOUNTING: 3M CLEAR TAPE FOR GLASS & SMOOTH FINISHES OR FOAM TAPE FOR SOLID SURFACES. REFER TO DETAIL ON SHEET G004.

FURNITURE SCHEDULE - "F"

DESIGN ID	COUNT	DESCRIPTION	FURN. BY	INST. BY	COMMENTS
BANQUETTE					
22491	2	BANQUETTE - SAN JUAN - 4FT 122CM - WHITE OAK WD0073	SB	GC	
22502	4	BANQUETTE - SAN JUAN - 6FT 183CM - WHITE OAK WD0073	SB	GC	
23016	2	BANQUETTE - SAN JUAN CUSHION SEAT AND BACK C EDGE - 4FT 122CM - CARAMEL BROWN NATURAL F0008	SB	GC	
23017	4	BANQUETTE - SAN JUAN CUSHION SEAT AND BACK C EDGE - 6FT 183CM - CARAMEL BROWN NATURAL F0008	SB	GC	
CHAIR					
21367	6	CHAIR - CAFE PEGGY UPHOLSTERED - WHITE OAK AND CARAMEL BROWN NATURAL WD0073 F0008	SB	GC	
22565	6	CHAIR - LOUNGE DAPHNE - WHITE OAK AND CARAMEL BROWN NATURAL WD0073 F0008	SB	GC	
23447	16	CHAIR - CAFE HANS 2.0 - MOTTLED GREY	SB	GC	
23449	8	CHAIR - LOUNGE HANS 2.0 - MOTTLED GREY	SB	GC	
TK0077	1	CHAIR - MANAGERS WORKSTATION	SB	GC	STEELCASE SERIES ONE ARMLESS
DESK					
TK0053	1	DESK - MANAGERS WORKSTATION SHELVES - 48IN 1220MM	SB	GC	
TK0076	1	DESK - MANAGERS WORKSTATION - 48X24X27IN 1220X610X685MM	SB	GC	
MIRROR					
TK0050	1	MIRROR - BOH - 16X51IN 405X1295MM	SB	GC	
OTHER					
22761	43	ACOUSTICAL CEILING PANEL - SUSPENSION MOUNT - 17X63IN 430X1600MM - BLACK	SB	GC	
TK0051	1	COAT HOOK STRIP - 30IN 760MM	SB	GC	BLACK FINISH
STORAGE					
TK0078	1	FILE MOBILE PEDESTAL WITH CUSHION AND LOCK	SB	GC	
TK0079	1	MANAGERS DESK CART - 24X20IN 610X510MM	SB	GC	
TABLE					
17340	6	TABLE - CAFE METAL PEDESTAL BASE SQUARE - 24IN 610MM - BLACK MT0028	SB	GC	
17341	2	TABLE - ACCESSIBLE METAL WITH TAPERED LEGS - 36X24IN 915X610MM - BLACK MT0028	SB	GC	
18400	1	TABLE - COMMUNITY CAFE HEIGHT ANGLE BASE - 8 SEAT WIDE - WITH POWER WHITE OAK WD0073	SB	GC	
18468	2	TABLE - BASE CAFE T LEG - HOT ROLLED STEEL MT0011	SB	GC	
18680	9	TABLE - BASE CAFE HEIGHT PEDESTAL - FLAT BLACK MT0028	SB	GC	
20127	4	TABLE - OCCASIONAL SIDE CAMERON - FLAT BLACK MT0028			
20128	4	TABLE - OCCASIONAL COFFEE CAMERON - FLAT BLACK MT0028	SB	GC	
21800	1	TABLE - TOP ACCESSIBLE ROUND EDGE OBLONG - 48X24IN 1220X610MM - WHITE OAK WD0073	SB	GC	
21842	9	TABLE - TOP ROUND EDGE ROUND - 24IN 610MM - WHITE OAK WD0073	SB	GC	
TK0028	3	TABLE - OCCASIONAL COFFEE COCO	SB	GC	
WINDOW TREATMENT					
22486	17	ROLLER SHADE - DARK BROWN - 5PC OPEN	SB	GC	

PERMIT SET - FOR CONSTRUCTION USE

© 2022 STARBUCKS COFFEE COMPANY

STARBUCKS®
2401 UTAH AVENUE SOUTH
SEATTLE, WASHINGTON 98134
(206) 318-1575

THESE DRAWINGS AND THE PROJECT MANUAL ARE CONFIDENTIAL AND SHALL REMAIN THE SOLE PROPERTY OF STARBUCKS CORPORATION, WHICH IS THE OWNER OF THE COPYRIGHT IN THIS WORK. THEY SHALL NOT BE REPRODUCED (IN WHOLE OR IN PART), SHARED WITH THIRD PARTIES OR USED IN ANY MANNER ON OTHER PROJECTS OR EXTENSIONS TO THIS PROJECT WITHOUT THE PRIOR WRITTEN CONSENT OF STARBUCKS CORPORATION. THESE DRAWINGS AND SPECIFICATIONS ARE INTENDED TO EXPRESS DESIGN INTENT FOR A PROTOTYPICAL STARBUCKS STORE (WHICH IS SUBJECT TO CHANGE AT ANYTIME) AND DO NOT REFLECT ACTUAL SITE CONDITIONS. NEITHER PARTY SHALL HAVE ANY OBLIGATION NOR LIABILITY TO THE OTHER (EXCEPT STATED ABOVE) UNTIL A WRITTEN AGREEMENT IS FULLY EXECUTED BY BOTH PARTIES.

STARBUCKS TEMPLATE VERSION: i2024.01.01

PABLO GARCIA, AIA, REG. FL NO. AR99297

Gensler

MAIN OFFICE
M. ARTHUR GENSLER JR. & ASSOCIATES
FL QUALIFIER'S LIC. NO. AR96486
43 FREMONT ST, SUITE 1500
SAN FRANCISCO, CA 94105 USA
Tel (415) 433.3700
Fax (415) 836.4599

SATELLITE OFFICE
M. ARTHUR GENSLER JR. & ASSOCIATES
545 NW 26TH ST
SUITE 250
MIAMI, FL 33127 USA
Tel (305) 350.7070
Fax (305) 350.7071

PROJECT NAME:
NW 43RD & 53RD

PROJECT ADDRESS:
5480 NW 43RD STREET
GAINESVILLE, FL 32653

STORE #: 10820
PROJECT #: 34769-081
ISSUE DATE: 03-22-2024
DESIGN MANAGER: ROMINA VIGNOLO
PRODUCTION DESIGNER: GENSLER
CHECKED BY: GENSLER

Revision Schedule

Rev	Date	By	Description

SHEET TITLE:
CASEWORK AND FF&E SCHEDULES
SCALE: AS SHOWN

SHEET NUMBER:
I601

WALL TREATMENT (AREA) SCHEDULE - "Q"

DESIGN ID	AREA	DESCRIPTION	FURN. BY	INST. BY	COMMENTS
OTHER					
X1100	16 SF	GWB CEILING WITH LEVEL 4 FINISH - PAINT AS SCHEDULED	GC	GC	FINISH: REFER TO RCP PLAN AT I103 FOR TONE TAG; INSTALLATION SHALL BE IN STRICT ACCORDANCE W/ MANUFACTURER'S INSTRUCTIONS.
TILE					
X1400	516 SF	TILE - ALTAMIRA - VANILLA - SATIN FINISH	SB	GC	GROUT: MAPEI - 105 DRIFTWOOD, 3/16IN THICKNESS. VENDOR: FIVE STAR CERAMICS GROUP. CONTACT INFO: CHRIS MACHADO CHRISM@FIVESCG.COM, LONG LEAD ITEM 10-12 WEEKS EXPECTED.
WALL COVERING					
17854	221 SF	WALL COVERING - TADAO - STARBUCKS WG11184374	SB	GC	
20623	15 SF	WALL COVERING - BURLAP - RETREAT	SB	GC	
23764	1019 SF	POLYWALL WALL COVERING - MATTE WHITE	GC	CG	
WOOD					
X1401	34 SF	WOOD - WHITE OAK - FULL PLANK - SELECTED GRAIN - VERTICAL	SB	GC	TO BE PROVIDED BY CASEWORK VENDOR

WALL BASE SCHEDULE - "B"

DESIGN ID	LENGTH	DESCRIPTION	FURN. BY	INST. BY	COMMENTS
METAL BASE					
X1301	37' - 4 1/4"	METAL BASE - BLACK MT0028 - 6IN 150MM	GC	GC	W/ SANITARY 1/2IN COVE BEND 45-DEGREE. PROVIDED BY CASEWORK VENDOR.
TILE BASE					
11403	51' - 9 1/4"	TILE BASE - BLACK - 6X12IN 150X300MM	SB	GC	GROUT GR0008: MAPEI 10 - BLACK; LATICRETE 45 - RAVEN; PRETOKOLL - P.FLEX PRETO
18740	82' - 10"	TILE BASE - PLAZA NOVA - BLACK SHADOW - 6X12IN 150X300MM	SB	GC	W/ BULLNOSE SANITARY 3/8IN COVE BASE MOLDING. GROUT: MAPEI - 10 BLACK, OR EQUAL.
19795	217' - 10 1/4"	POLYVINYL FLOOR TILE - ECOGRIP - PEWTER	GC	GC	
TRANSITION BASE					
X1302	33' - 9"	TAPERED ALUMINIUM FRAME - 16 GA	GC	GC	FINISH: DARK ANTHRACITE

CEILING TREATMENT SCHEDULE - "U"

DESIGN ID	AREA	DESCRIPTION	FURN. BY	INST. BY	COMMENTS
OTHER					
11302	51 SF	ACT - WHITE - 2X4FT 61X122CM	GC	GC	VINYL CLAD ACT AT BOH AREA
X1100	708 SF	GWB CEILING WITH LEVEL 4 FINISH - PAINT AS SCHEDULED	GC	GC	FINISH: REFER TO RCP PLAN AT I103 FOR TONE TAG; INSTALLATION SHALL BE IN STRICT ACCORDANCE W/ MANUFACTURER'S INSTRUCTIONS.
PLASTIC					
X1101	51 SF	ACT - CIRRUS BELEVED SUPRAFINE SUSPENSION - WHITE - 2X4FT 61X122CM	GC	GC	WITH MANUFACTURER'S INSTRUCTIONS

WALL TREATMENT (LENGTH) SCHEDULE - "R"

DESIGN ID	LENGTH	DESCRIPTION	FURN. BY	INST. BY	COMMENTS
METAL BASE					
X1301	37' - 4 1/4"	METAL BASE - BLACK MT0028 - 6IN 150MM	GC	GC	W/ SANITARY 1/2IN COVE BEND 45-DEGREE. PROVIDED BY CASEWORK VENDOR.
TILE BASE					
11403	51' - 9 1/4"	TILE BASE - BLACK - 6X12IN 150X300MM	SB	GC	GROUT GR0008: MAPEI 10 - BLACK; LATICRETE 45 - RAVEN; PRETOKOLL - P.FLEX PRETO
18740	82' - 10"	TILE BASE - PLAZA NOVA - BLACK SHADOW - 6X12IN 150X300MM	SB	GC	W/ BULLNOSE SANITARY 3/8IN COVE BASE MOLDING. GROUT: MAPEI - 10 BLACK, OR EQUAL.
19795	217' - 10 1/4"	POLYVINYL FLOOR TILE - ECOGRIP - PEWTER	GC	GC	
TRANSITION BASE					
X1302	33' - 9"	TAPERED ALUMINIUM FRAME - 16 GA	GC	GC	FINISH: DARK ANTHRACITE

FLOOR TREATMENT SCHEDULE - "T"

DESIGN ID	AREA	DESCRIPTION	FURN. BY	INST. BY	COMMENTS
PLASTIC					
19795	887 SF	POLYVINYL FLOOR TILE - ECO-GRIP - PEWTER	GC	GC	GC TO PROCURE FROM ALLIED INDUSTRIES
TILE					
20228	1100 SF	TILE - I COCCI - CEMENTO - 24X24IN 600X600MM	SB	GC	GROUT: MAPEI - 47 CHARCOAL, OR EQUAL
WALK OFF MAT					
19288	35 SF	WALK OFF MAT - HELIX Z1 - BLACK - 12X9IN 305X230MM	SB	GC	

PLUMBING FIXTURE SCHEDULE - "P"

DESIGN ID	COUNT	DESCRIPTION	FURN. BY	INST. BY	COMMENTS
DRAIN					
10294	6	DRAIN - FLOOR SINK SQUARE - 12IN 305MM	SB	GC	
10726	6	DRAIN - GRATE HALF SQUARE - 12IN 305MM	SB	GC	
FAUCET					
10152	1	FAUCET - DOUBLE LABORATORY WITH BENT RISER SPOUT	SB	GC	
10153	3	FAUCET - WATER TOWER - 12IN 305MM	SB	GC	
10215	1	FAUCET - DOUBLE LABORATORY WITH SWING SPOUT	SB	GC	
10597	2	FAUCET - SINGLE HANDLE	SB	GC	
11003	2	FAUCET - METERED	SB	GC	
22642	2	FAUCET - INSTANTHOT SYSTEM 2 BUTTON WITH BOILER AND BRACKET	SB	GC	KIT INCLUDES FONT, UNDERCOUNTER BOILER AND BOILER BRACKET FOR SIDE PANEL MOUNTING. BRACKET CAN BE FLOOR MOUNTED USING SET OF (4) STAINLESS STEEL LEGS, ORDERED SEPARATELY THROUGH VENDOR.
SINK					
10549	1	SINK - RINSE DROP IN SST - 12X20IN 305X510MM	SB	GC	
17565	1	SINK - RINSE WITH DRAINBOARD - 15X27IN 380X685MM	SB	GC	
22768	2	SINK - COUNTERTOP RINSER WITH WATER TOWER - 26X9IN 660X235MM	SB	GC	

PAINT SCHEDULE

DESIGN ID	DESCRIPTION	LRV	FURN. BY	INST. BY	COMMENTS
20438	SW7020 BLACK FOX, OR EQUIVALENT	7	GC	GC	SW USE PRIMER CP-1; NCS - S 7502-Y; AKZO NOBEL - 30YY 10/038
20456	SW7631 CITY LOFT, OR EQUIVALENT	70	GC	GC	SW USE PRIMER CP-1; NCS - S 2002-Y50R; AKZO NOBEL - 40YY 73/028
X0300	SW7037 BALANCED BEIGE, OR EQUIVALENT	48	GC	GC	SW USE PRIMER CP-1; NCS - S 2002-Y50R; AKZO NOBEL - 40YY 73/028
X0301	SW7039 VIRTUAL TAUPE, OR EQUIVALENT	20	GC	GC	SW USE PRIMER CP-1; NCS - S 2002-Y50R; AKZO NOBEL - 40YY 73/028

MECHANICAL EQUIPMENT SCHEDULE - "M"

DESIGN ID	COUNT	DESCRIPTION	FURN. BY	INST. BY	COMMENTS
HVAC					
10317	1	HVAC - VAV SUPPLY 4 WAY SQUARE - 24IN 610MM	GC	GC	COLOR TO MATCH CEILING, REFER TO MECHANICAL DRAWINGS.
10589	1	HVAC - SUPPLY ROUND - 22IN 560MM	GC	GC	
10718	1	HVAC - SUPPLY 2 WAY HARD LID SQUARE - 12IN 305MM	GC	GC	COLOR TO MATCH CEILING, REFER TO MECHANICAL DRAWINGS.

DATA DEVICE SCHEDULE - "A"

DESIGN ID	COUNT	DESCRIPTION	FURN. BY	INST. BY	COMMENTS
AUDIO VISUAL					
10005	1	MUSIC SYSTEM	SB	GC	
10012	1	DT COMMUNICATION SYSTEM	SB	GC	
10013	2	DT QUEUE CAMERA	SB	GC	GC TO COORD. W/ SB VENDOR.
12336	1	DT TIMER SYSTEM	SB	GC	
19339	1	AMPLIFIER - 40W	SB	GC	
19493	4	SPEAKER PENDANT MOUNTED - BLACK	SB	GC	GC TO INSTALL AND TEST SYSTEM.
22726	1	DT POS MONITOR ARM TRIPLE SURFACE MOUNTED	SB	GC	PART OF RETAIL IT EQUIPMENT PACKAGE
DATA					
10002	1	COMPUTER MANAGER WORKSTATION	SB	GC	
10007	1	PRINTER MANAGER WORKSTATION	SB	GC	
18744	1	EQUIPMENT RACK WITH LOCK - 24IN 610MM	SB	GC	
20294	3	IOT MODULE	SB	GC	
GRAPHICS - INTERIOR MENU					
22970	4	MENU BOARD - DIGITAL DISPLAY - 44X25.25IN 1121X644MM - BLACK	SB	GC	
22971	3	MENU BOARD - DIGITAL MENU BOARD MOUNTING BRACKET SINGLE SCREEN - BLACK	SB	GC	GC TO INSTALL AND BRACKET AND ASSOCIATED BLOCKING
23021	1	MENU BOARD - ORDER STATUS BOARD MOUNTING BRACKET - BLACK	SB	GC	
POINT OF SALE					
10022	1	MONEY COUNTER	SB	GC	
10029	6	POS BANK	SB	GC	
10075	1	CUP LABELER	SB	GC	
SECURITY					
10028	1	SAFE BASE	SB	GC	

LIGHTING FIXTURE SCHEDULE - "L"

DESIGN ID	COUNT	DESCRIPTION	FURN. BY	INST. BY	BULB	COMMENTS
EXIT						
19047	3	LED EXIT SIGN WITH EMERGENCY LIGHT - BLACK AND GREEN	SB	GC	INTEGRATED LED	
PENDANT						
20686	1	PENDANT - FLOS IC SMALL - BRASS	SB	GC	AS PACKAGED: 1X LED 5W CANDELABRA BASE	
RECESSED CAN						
X0601	29	CAN - LED ADJUSTABLE RECESSED - 3IN 75MM - BLACK - 1155LM FLOOD	SB	GC	INTEGRATED LED	WITH DIMMER.
STRIP						
22215	1	STRIP - LED TAPE IN HOUSING - VARIABLE LENGTH - BLACK - 350LM PER FT	SB	GC	INTEGRATED LED	FIELD TRIMMABLE TO 0.9IN LENGTHS
22217	1	STRIP - LED TAPE - VARIABLE LENGTH - 350LM PER FT	SB	GC	INTEGRATED LED	FIELD TRIMMABLE TO 0.9IN LENGTHS
TRACK						
15059	1	TRACK - WITH CONNECTORS - 6FT 183CM - WHITE - 1 CIRCUIT	SB	GC		
19410	6	TRACK - WITH CONNECTORS - 6FT 183CM - BLACK - 2 CIRCUIT	SB	GC		
19411	8	TRACK - WITH CONNECTORS - 8FT 244CM - BLACK - 2 CIRCUIT	SB	GC		
21779	28	TRACK - LED FIXTURE WITH SNOOT - 3IN 75MM - BLACK - 1100LM FLOOD	SB	GC	INTEGRATED LED	
TROFFER						
21783	1	TROFFER - LED RECESSED - 24X48IN 600X1200MM - WHITE - 4300LM	SB	GC	INTEGRATED LED	

BARRIER FREE DOOR HARDWARE SCHEDULE - "D"

DESIGN ID	COUNT	MARK	DESCRIPTION	FURN BY	INST BY	COMMENTS
23130	1	2	DOOR - BARRIER FREE HARDWARE ACTUATOR BOLLARD	SB	GC	GC TO COORD. INSTALL & CABLING WITH SB VENDOR. GC ORDER FROM LOCKNET-SBUXTEAMLOCKNET.COM
23132	1	3	DOOR - BARRIER FREE HARDWARE ACTUATOR MULLION MOUNT	SB	GC	GC TO COORD. INSTALL & CABLING WITH SB VENDOR. GC ORDER FROM LOCKNET-SBUXTEAMLOCKNET.COM
23135	1	4	DOOR - BARRIER FREE HARDWARE OPERATOR - BLACK	SB	GC	GC TO COORD. INSTALL & CABLING WITH SB VENDOR. GC ORDER FROM LOCKNET-SBUXTEAMLOCKNET.COM

DOOR SCHEDULE - "D"

DESIGN ID	MARK	DESCRIPTION	WIDTH	HEIGHT	HARDWARE SET	FURN BY	INST BY	COMMENTS
Exterior								
EXIST	E3	DOOR - SINGLE FLUSH - 36IN	3' - 5 1/2"	7' - 0"	EXIST	SB	GC	EXISTING DOOR TO REMAIN. GC TO VEIFY THEIR CONDITION AND PROPER FUNCTION.
EXIST	E1	DOOR - STOREFRONT METAL FRAME DOUBLE - TYPE A	6' - 0"	7' - 0"	3-B-BRFR	SB	GC	EXISTING DOOR AND HARDWARE TO REMAIN. GC TO VEIFY THEIR CONDITION AND PROPER FUNCTION.
EXIST	E2	DOOR - STOREFRONT METAL FRAME SINGLE - TYPE B	3' - 0"	7' - 0"	EXIST	SB	GC	EXISTING DOOR AND HARDWARE TO REMAIN. GC TO VEIFY THEIR CONDITION AND PROPER FUNCTION.
Interior								
EXIST	E4	DOOR - SINGLE FLUSH - 36IN	3' - 0"	7' - 0"	EXIST	SB	GC	RR DOOR PANEL FINISHED TO REMAIN AS EXISTING. LET'S PAINT THE DOOR FRAME TO MATCH SW0039 VIRTUAL TAUPE
EXIST	E5	DOOR - SINGLE FLUSH - 36IN	3' - 0"	7' - 0"	EXIST	SB	GC	RR DOOR PANEL FINISHED TO REMAIN AS EXISTING. LET'S PAINT THE DOOR FRAME TO MATCH SW0039 VIRTUAL TAUPE
10086	1	DOOR - SINGLE IMPACT DOUBLE ACTING - 36IN 915MM	3' - 0"	7' - 0"	11	SB	GC	ELIASON DOOR PLANEL TO MATCH WILSONART SOLICOLOR KHAKI BROWN. DOOR FRAME TO MATCH SW7037 BALANCED BEIGE

PERMIT SET - FOR CONSTRUCTION USE

© 2022 STARBUCKS COFFEE COMPANY

STARBUCKS®
2401 UTAH AVENUE SOUTH
SEATTLE, WASHINGTON 98134
(206) 318-1575

THESE DRAWINGS AND THE PROJECT MANUAL ARE CONFIDENTIAL AND SHALL REMAIN THE SOLE PROPERTY OF STARBUCKS CORPORATION, WHICH IS THE OWNER OF THE COPYRIGHT IN THIS WORK. THEY SHALL NOT BE REPRODUCED (IN WHOLE OR IN PART), SHARED WITH THIRD PARTIES OR USED IN ANY MANNER ON OTHER PROJECTS OR EXTENSIONS TO THIS PROJECT WITHOUT THE PRIOR WRITTEN CONSENT OF STARBUCKS CORPORATION. THESE DRAWINGS AND SPECIFICATIONS ARE INTENDED TO EXPRESS DESIGN INTENT FOR A PROTOTYPICAL STARBUCKS STORE (WHICH IS SUBJECT TO CHANGE AT ANYTIME) AND DO NOT REFLECT ACTUAL SITE CONDITIONS. NEITHER PARTY SHALL HAVE ANY OBLIGATION NOR LIABILITY TO THE OTHER (EXCEPT STATED ABOVE) UNTIL A WRITTEN AGREEMENT IS FULLY EXECUTED BY BOTH PARTIES.

STARBUCKS TEMPLATE VERSION: i2024.01.01

PABLO GARCIA, AIA, REG. FL NO. AR99297

Gensler

MAIN OFFICE
M. ARTHUR GENSLER JR. & ASSOCIATES
FL QUALIFIER'S LIC. NO. AR96486
40 FREMONT ST, SUITE 1500
SAN FRANCISCO, CA 94105 USA
Tel (415) 433.3700
Fax (415) 836.4599

SATELLITE OFFICE
M. ARTHUR GENSLER JR. & ASSOCIATES
545 NW 26TH ST
SUITE 250
MIAMI, FL 33127 USA
Tel (305) 350.7070
Fax (305) 350.7071

PROJECT NAME:
NW 43RD & 53RD

PROJECT ADDRESS:
5480 NW 43RD STREET
GAINESVILLE, FL 32653

STORE #: 10820
PROJECT #: 34769-081
ISSUE DATE: 03-22-2024
DESIGN MANAGER: ROMINA VIGNOLO
PRODUCTION DESIGNER: GENSLER
CHECKED BY: GENSLER

Revision Schedule

Rev	Date	By	Description

SHEET TITLE:
INTERIOR FINISHES SCHEDULES
SCALE: AS SHOWN

SHEET NUMBER:
I602

STRUCTURAL NOTES

GENERAL NOTES

GN-1 The governing Code for this Project is the Florida Building Code, 8th Edition (2023). This Code prescribes which edition of each referenced standard applies to this Project.

GN-2 To the best of our knowledge, the Structural Drawings and Specifications comply with the applicable requirements of the governing Building Code.

GN-3 Construction is to comply with the requirements of the governing Building Code and all other applicable Federal, State, and Local Codes, Standards, Regulations and Laws.

GN-4 Use these Notes in conjunction with the Plan Specifications or Project Specifications. If a conflict exists, the more stringent governs.

GN-5 See Plan Specifications for testing.

GENERAL NOTES - CONTRACTOR REQUIREMENTS

GN-6 Contractor refers to the General Contractor, Construction Manager, or the organization that is assigned to have overall responsibility and supervision of the Project.

GN-7 The Contractor shall be solely responsible for, and have control over, the means, methods, supervision, techniques, sequences, procedures of construction, quality, and correctness of the work. The Contractor is solely responsible for jobsite safety including all OSHA requirements.

GN-8 The Contractor shall coordinate all Contract Documents with field conditions and dimensions and Project Shop Drawings prior to construction. Do not scale drawings; use only printed dimensions. Report any discrepancies in writing to the Architect prior to proceeding with work. Do not change size or location of structural members without written instructions from the Structural Engineer of Record.

GN-9 Contractors who discover discrepancies, omissions or variations in the Contract Documents during bidding shall immediately notify the Architect. The Architect will resolve the condition and issue a written clarification.

GN-10 The Contractor shall protect adjacent property, his own work and the public from harm. The Contractor is advised to document the condition of adjacent property with a photographic survey and other documentation, including crack monitoring, prior to and during construction.

GENERAL NOTES - DRAWINGS

GN-11 The Structural drawings shall be used in conjunction with the architectural drawings and all other drawings and documents, including shop drawings prepared by equipment suppliers and delegated engineers.

GN-12 Openings shown on Structural Drawings are only pictorial. See the Architectural for complete information such as slab depressions, slopes, curbs, finishes, and opening locations in structural members as required by MEP systems and architectural elements.

GN-13 Details labeled "typical" apply to all situations that are the same or similar to those specifically referenced, whether or not they are keyed in at each location. Questions regard-ing the applicability of typical details shall be resolved by the Architect.

GN-14 See Architectural drawings for fireproofing and waterproofing details and requirements.

GENERAL NOTES - DESIGN LOADS

GN-15 Design Loads:

OCCUPANCY	LIVE LOAD	DEAD LOAD	CONCENTRATED LOAD
Retail	75 psf	20 psf	1,000#

Design superimposed dead loads listed above do not include masonry walls or other concentrated loads. See architectural drawings for these loads. Concentrated live loads do not act concurrently with area live loads.

GN-16 Handrails and Guards:

Loads shall be applied to act in any direction at any point on the handrail or top rail to produce the maximum load effect. Linear and concentrated loading shall not be applied concurrently.
Glass in handrails and guards shall be designed with a safety factor of 4.

SHOP DRAWINGS AND OTHER SUBMITTALS

SD-1 Refer to the applicable Plan Specifications or Project Specifications for technical content requirements. Incomplete submittals will be returned without review.

SD-2 Submit specific components, such as columns, footings, etc., in a single package. Submit similar floors together.

SD-3 On first submittal, clearly flag and cloud all differences from the Contract Documents. On resubmittals, flag and cloud all changes and additions to previous submittal; only clouded items will be reviewed.

SD-4 The Trade Contractor is responsible for confirming and correlating dimensions at the job sites, for tolerances, clearances, quantities, fabrication processes and techniques of construction, coordination of the work with other trades and full compliance with the Contract Documents.

SD-5 The Contractor shall review and approve submittals, including substitution requests and shop drawings, and shall sign and date each drawing prior to submitting to the Architect. This approval is to confirm that the submittal is complete, complies with the submittal requirements and is coordinated with field dimensions, other trades, erection sequencing and constructability. Submittals not reviewed by the Contractor will be returned without review.

SD-6 Bliss & Nyitray (BNI) reviews submittals to confirm that the submittal is in general conformance with the design concept presented in the Contract Documents. Quantities and dimensions are not checked. Notations on submittals do not authorize changes to the contract sum. Checking of the submittal by BNI shall not relieve the Contractor of responsibility for deviations from the Contract Documents and from errors or omissions in the submittal.

SD-7 BNI may transfer to the Contractor BIM files, CAD files or other electronic data for use in preparing Shop Drawings. The contractor shall email a request for BIM or CAD files along with an acknowledgement that he/she has read and agreed to the following terms and conditions:

A. This electronic data remains the property of BNI, and in no case shall the transfer of these files be considered a sale. The files shall not be used for other projects, additions to this project, or for completion of this project by others.
B. The Contractor is responsible for assuring that the electronic data accurately represents the Contract Documents. In the event of a conflict, the Contract Documents shall govern.
C. The electronic data is current as of the date of transfer but may subsequently be revised or supplemented. If so, then the Contractor may request updated electronic data.
D. The use of these electronic data shall not modify Contractor's responsibility for coordination with other trades, or for the proper checking and coordination of dimensions, details, member sizes and gage, and quantities of materials to facilitate complete and accurate fabrication and erection.
E. Do not scale dimensions since the electronic data may not be precise and, in some cases, have been intentionally altered for presentation purposes.
F. Contractor shall indemnify, defend and hold harmless BNI from all claims, damages, losses, expenses, penalties, and liabilities, including attorneys' fees, arising out of or resulting from the use of the electronic data by Contractor or others.

POST-INSTALLED ANCHORS - GENERAL

AN-1 Substitution requests will be considered for products having an ICC-ES report recognizing the product for the appropriate application. Substitute concrete anchors must be approved for use in cracked concrete. Substitution requests shall include signed and sealed calculations prepared by a Florida Licensed Engineer who demonstrates that substituted product is capable of achieving the equivalent performance values of the design basis product.

AN-2 Confirm the absence of reinforcing steel by drilling a 1/4" diameter pilot hole for each anchor in non-post-tension applications. For post-tensioned slabs, confirm the absence of reinforcing steel by nondestructive testing prior to drilling holes. Do not cut reinforcing steel without approval of the Structural Engineer.

AN-3 Install in accordance with manufacturer's printed installation instructions (MPII) (ACI 314-19, 26.7.2). Refer to MPII for appropriate drill size. Clean hole and remove dust.

AN-4 Anchors listed below may not be used to substitute the specified anchors in a product's Notice of Acceptance (NOA) or Florida Product Approval.

AN-5 Anchors shall be installed in concrete having a minimum age of 21-days at time of anchor installation (ACI 318-19, 26.7.2(f))

POST-INSTALLED ANCHORS - MECHANICAL ANCHORS

AN-6 For anchoring into concrete: Wedge-Type Mechanical anchors shall have been tested and qualified for use in accordance with ACI 355.2 and ICC-ES AC193. Pre-approved anchors include Hilti Kwik Bolt TZ, DeWalt Power-Stud+SD1, and Simpson Strong-Bolt 2.

POST-INSTALLED ANCHORS - SCREW ANCHORS

AN-7 For anchoring into concrete: Screw anchors shall have been tested and qualified for use in accordance with ACI 355.2 and ICC-ES AC193. Pre-approved anchors include the ¼"Ø Hilti KH-EZ and the ¼"Ø DeWalt Screw Bolt +.

POST-INSTALLED ANCHORS - ADHESIVE ANCHORS

AN-8 Install adhesive anchors in accordance with manufacturer's requirements for concrete age, temperature, moisture condition, acceptable drilling methods, and hole preparation in conformance with ACI 318-19, 26.7.1(i).

AN-9 For anchoring into concrete: Adhesive anchors shall have been tested and qualified for use in accordance with ACI 355.4 and ICC-ES AC308. Pre-approved standard cure time adhesives include Hilti RE500v3, DeWalt Pure 110+, and Simpson Set-XP.

AN-10 Threaded rods for use with adhesive are galvanized ASTM F1554 Grade 36 U.O.N.

LIGHT GAUGE STEEL FRAMING (LTGFRM)

LG-1 Fabricate and erect stud construction in accordance with the "Standard for Cold-Formed Steel Framing-General Provisions", American Iron and Steel Institute and General Notes.

LG-2 Light guage steel framing shall be formed from steel having a galvanized coating meeting the requirements of ASTM A653. Yield strength for 16 GA (54mil) or heavier shall be 50ksi and for 18 GA (43mil) and lighter shall be 33ksi. Alternatively, yield strength fir 18mil may be 70ksi to achieve a 20 GA equivalent.

LG-3 Use galvanized steel Track, minimum 350T137-33 for 4" walls and 600T137-33 for 6" walls, at top and bottom light gauge wall studs fastened to each stud with #10 tek screws each side of wall.

LG-4 Splicing of framing components, other than the continuous track at the top and bottom of walls, is not permitted, u.o.n. Splicing of track used in the construction of the jamb, head, or sill assemblies of framed wall openings is not permitted. Where splicing of track is necessary between stud spacings, a section of stud shall be placed on the adjoining tracks across the joint fastened to the flanges at both sides of the wall. Holes or notches in headers are not permitted unless approved in writing by the Engineer of Record or as shown on the drawings.

LG-5 Use 0.157" diameter power actuated fasteners with a minimum of 1" embedment spaced at 24" o.c., U.O.N.

LG-6 Screws, where required, shall meet the minimum requirements of SAE J-429 Grade 5 and IFI-105. Screws shall have a protective coating equivalent to cadmium or zinc plating, ASTM B766.

Field cutting of LTGFRM framing members shall be saw or shear. Torch cutting is not permitted.

STRUCTURAL PLAN SPECIFICATIONS

GENERAL NOTES

SGN-1 These Plan Specifications are intended to be used for projects without Project Specification Books. If they are accidentally issued along with a Project Specification Books, the Project Specification Books shall supersede the Plan Specifications.

RISK CATEGORY	1.0 MULITPLIER	0.60 MULITPLIER	0.42 MULITPLIER
Risk Category II	700 YEAR MRI	50-YEAR MRI	25-YEAR MRI

SHOP DRAWINGS AND SUBMITTALS

SSD-1 Material substitution shall not be submitted in the shop drawings without a substitution request being made to the Architect in advance and in writing, along with detailed substitution cost savings to be credited to the Owner. Upon approval by the Architect, the material substitution can be included in the submitted shop drawings.

SSD-2 All structural Shop Drawings shall be submitted in PDF format to BNI for review and approval. Submittals shall be reviewed and electronically stamped by the Contractor as having "No Exception Taken".

SSD-3 Manufacturer Literature and Product Data shall be submitted in PDF format. The submittals will be stamped as "Received, for record only" by BNI and returned accordingly.

BLISS & NYITRAY, INC.
STRUCTURAL ENGINEERS
FL Certificate of Authorization No. 674
www.bniengineers.com BNI Proj. No.22103,63
10440 N. Central Expressway, Ste 1530
Dallas, Texas 75231
Tel. (214) 432-8232
Gabriel J. Leitz, P.E. FL Reg. No. 81348

To the best of the Structural Engineer's knowledge, the Plans and Specifications comply with the applicable minimum building codes.

FOR CONSTRUCTION USE

PERMIT SET -

© 2022 STARBUCKS COFFEE COMPANY

STARBUCKS®
2401 UTAH AVENUE SOUTH
SEATTLE, WASHINGTON 98134
(206) 318-1575

THESE DRAWINGS AND THE PROJECT MANUAL ARE CONFIDENTIAL AND SHALL REMAIN THE SOLE PROPERTY OF STARBUCKS CORPORATION, WHICH IS THE OWNER OF THE COPYRIGHT IN THIS WORK. THEY SHALL NOT BE REPRODUCED (IN WHOLE OR IN PART), SHARED WITH THIRD PARTIES OR USED IN ANY MANNER ON OTHER PROJECTS OR EXTENSIONS TO THIS PROJECT WITHOUT THE PRIOR WRITTEN CONSENT OF STARBUCKS CORPORATION. THESE DRAWINGS AND SPECIFICATIONS ARE INTENDED TO EXPRESS DESIGN INTENT FOR A PROTOTYPICAL STARBUCKS STORE (WHICH IS SUBJECT TO CHANGE AT ANYTIME) AND DO NOT REFLECT ACTUAL SITE CONDITIONS. NEITHER PARTY SHALL HAVE ANY OBLIGATION NOR LIABILITY TO THE OTHER (EXCEPT STATED ABOVE) UNTIL A WRITTEN AGREEMENT IS FULLY EXECUTED BY BOTH PARTIES.

STARBUCKS TEMPLATE VERSION: i2024.01.29

Digitally signed by Gabriel Leitz
Reason: This item has been digitally signed and sealed by Gabriel Leitz, P.E. on the date indicated using a Digital Signature. Printed copies of this document are not considered signed and sealed and the signature may not be verified on any electronic copies.
Date: 2024.03.20 15:28:55-04'00'

GABRIEL J. LEITZ LICENSE NO. 81348 STATE OF FLORIDA PROFESSIONAL ENGINEER

Gabriel J. Leitz, P.E. FL Reg. No. 81348

Gensler
MAIN OFFICE
M. ARTHUR GENSLER JR. & ASSOCIATES
FL QUALIFIER'S LIC. NO. AR96486
45 FREMONT ST, SUITE 1500
SAN FRANCISCO, CA 94105 USA
Tel (415) 433.3700
Fax (415) 836.4599
SATELLITE OFFICE
M. ARTHUR GENSLER JR. & ASSOCIATES
FL QUALIFIER'S LIC. NO. AA0002837
545 NW 26TH ST
SUITE 250
MIAMI, FL 33127 USA
Tel (305) 350.7070
Fax (305) 350.7071

PROJECT NAME:
NW 43RD & 53RD

PROJECT ADDRESS:
5480 NW 43RD STREET
GAINESVILLE, FL 32653

STORE #:	10820
PROJECT #:	34769-081
ISSUE DATE:	03-20-2024
DESIGN MANAGER:	ES
PRODUCTION DESIGNER:	RV
CHECKED BY:	AP

Revision Schedule

Rev	Date	By	Description

SHEET TITLE:
STRUCTURAL NOTES

SCALE: AS SHOWN

SHEET NUMBER:
S1.00

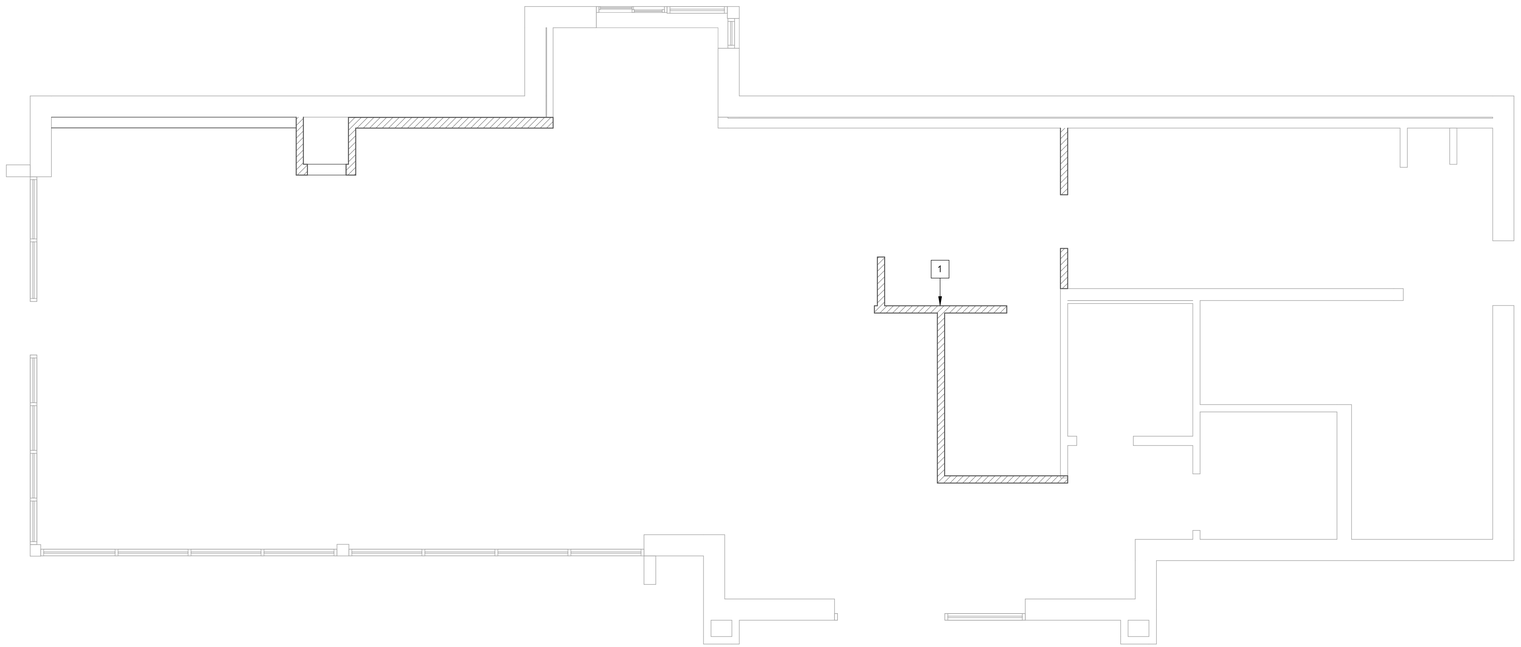

FIRST LEVEL

1/4" = 1'-0"

NORTH

PLAN KEYNOTES:

1 INTERIOR LIGHT GAUGE STUDS PER S3.01. SEE ARCH FOR WIDTH AND HEIGHT.

NOTE:
TERMITE PROTECTION SHALL BE PROVIDED WITH REGISTERED TERMITICIDES. UPON COMPLETING THE APPLICATION OF THE TERMITE PROTECTIVE TREATMENT, A CERTIFICATE OF COMPLIANCE SHALL BE ISSUED TO THE BUILDING DEPARTMENT BY THE LICENSED PEST CONTROL COMPANY THAT CONTAINS THE FOLLOWING STATEMENT, "THE AREAS UNDERNEATH NEW SLABS-ON-GRADE HAVE RECEIVED A COMPLETE TREATMENT FOR THE PREVENTION OF SUBTERRANEAN TERMITES. TREATMENT IS IN ACCORDANCE WITH RULES AND LAWS ESTABLISHED BY THE FLORIDA DEPARTMENT OF AGRICULTURE AND CONSUMER SERVICES." REFER TO FBC SECTION 1816 FOR ADDITIONAL INFORMATION.

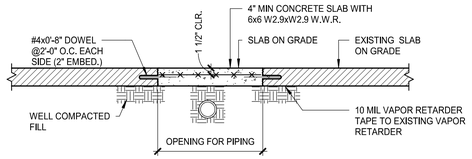

1 TRENCH REPAIR DETAIL
AS REQ'D BY ARCHITECT

3/4" = 1'-0"

BLISS & NYITRAY, INC.
STRUCTURAL ENGINEERS
FL Certificate of Authorization No. 674
www.bniengineers.com BNI Proj. No.22103.63
10440 N. Central Expressway, Ste 1530
Dallas, Texas 75231
Tel. (214) 432-8232
Gabriel J. Leitz, P.E. FL Reg. No. 81348

To the best of the Structural Engineer's knowledge, the Plans and Specifications comply with the applicable minimum building codes.

PERMIT SET - FOR CONSTRUCTION USE

© 2022 STARBUCKS COFFEE COMPANY

STARBUCKS®
2401 UTAH AVENUE SOUTH
SEATTLE, WASHINGTON 98134
(206) 318-1575

THESE DRAWINGS AND THE PROJECT MANUAL ARE CONFIDENTIAL AND SHALL REMAIN THE SOLE PROPERTY OF STARBUCKS CORPORATION, WHICH IS THE OWNER OF THE COPYRIGHT IN THIS WORK. THEY SHALL NOT BE REPRODUCED (IN WHOLE OR IN PART), SHARED WITH THIRD PARTIES OR USED IN ANY MANNER ON OTHER PROJECTS OR EXTENSIONS TO THIS PROJECT WITHOUT THE PRIOR WRITTEN CONSENT OF STARBUCKS CORPORATION. THESE DRAWINGS AND SPECIFICATIONS ARE INTENDED TO EXPRESS DESIGN INTENT FOR A PROTOTYPICAL STARBUCKS STORE (WHICH IS SUBJECT TO CHANGE AT ANYTIME) AND DO NOT REFLECT ACTUAL SITE CONDITIONS. NEITHER PARTY SHALL HAVE ANY OBLIGATION NOR LIABILITY TO THE OTHER (EXCEPT STATED ABOVE) UNTIL A WRITTEN AGREEMENT IS FULLY EXECUTED BY BOTH PARTIES.

STARBUCKS TEMPLATE VERSION: i2024.01.29

Digitally signed by Gabriel Leitz
Reason: This item has been digitally signed and sealed by Gabriel Leitz, P.E. on the date indicated using a Digital Signature. Printed copies of this document are not considered signed and sealed and the signature must be verified on any electronic copies.
Date: 2024.03.20 15:15:04'00'

GABRIEL J. LEITZ LICENSED NO. 81348 STATE OF FLORIDA PROFESSIONAL ENGINEER

Gabriel J. Leitz, P.E. FL Reg. No. 81348

Gensler
MAIN OFFICE
M. ARTHUR GENSLER JR. & ASSOCIATES
FL QUALIFIERS LIC. NO. AR96486
45 FREMONT ST, SUITE 1500
SAN FRANCISCO, CA 94105 USA
Tel (415) 433.3700
Fax (415) 836.4599

SATELLITE OFFICE
M. ARTHUR GENSLER JR. & ASSOCIATES
FL QUALIFIERS LIC. NO. AA0002837
545 NW 26TH ST
SUITE 250
MIAMI, FL 33127 USA
Tel (305) 350.7070
Fax (305) 350.7071

PROJECT NAME:
NW 43RD & 53RD

PROJECT ADDRESS:
5480 NW 43RD STREET
GAINESVILLE, FL 32653

STORE #:	10820
PROJECT #:	34769-081
ISSUE DATE:	03-20-2024
DESIGN MANAGER:	ES
PRODUCTION DESIGNER:	RV
CHECKED BY:	AP

Revision Schedule

Rev	Date	By	Description

SHEET TITLE:
SLAB ON GRADE PLAN & DETAILS
SCALE: AS SHOWN

SHEET NUMBER:
S2.00

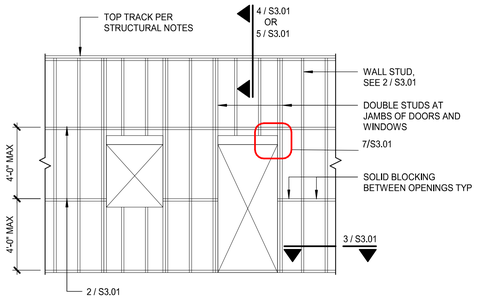

1 TYPICAL LIGHT GAGE WALL FRAMING

1 1/2" = 1'-0"

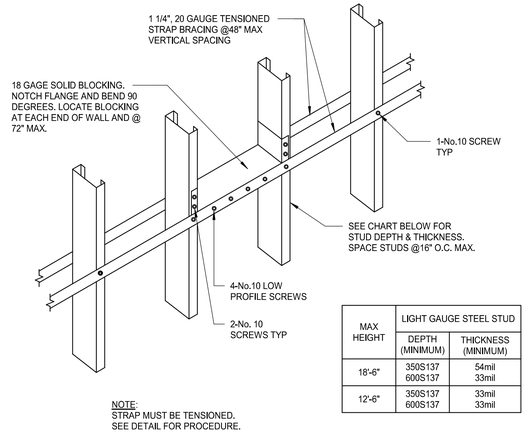

NOTE:
STRAP MUST BE TENSIONED.
SEE DETAIL FOR PROCEDURE.

MAX HEIGHT	LIGHT GAUGE STEEL STUD	
	DEPTH (MINIMUM)	THICKNESS (MINIMUM)
18'-6"	350S137 600S137	54mil 33mil
12'-6"	350S137 600S137	33mil 33mil

2 INTERIOR STUD WALL

HORIZONTAL BRIDGING

1 1/2" = 1'-0"

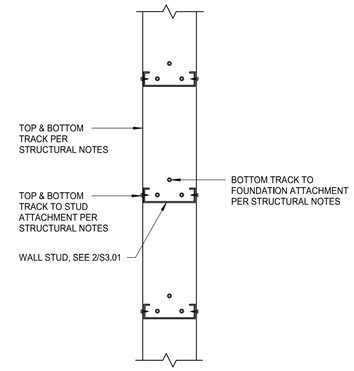

3 LIGHT GAGE STEEL TRACK CONNECTION

PLAN VIEW

1 1/2" = 1'-0"

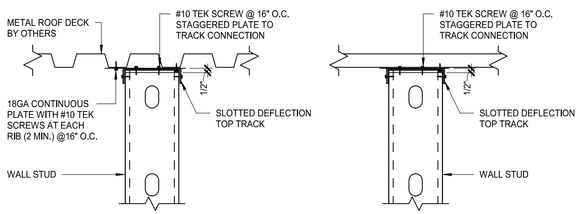

4 TOP OF INTERIOR WALL

NON-LOAD BEARING TO ROOF DECK

1 1/2" = 1'-0"

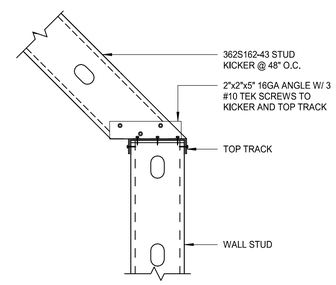

5 LIGHT GAUGE KICKER CONNECTION

AT TOP OF WALL FRAMING

1 1/2" = 1'-0"

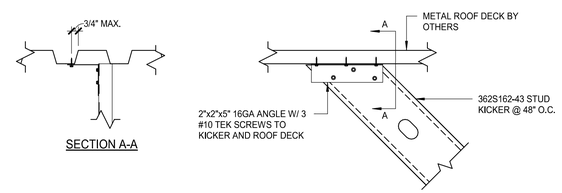

6 LIGHT GAUGE KICKER CONNECTION

AT BOTTOM OF ROOF FRAMING

1 1/2" = 1'-0"

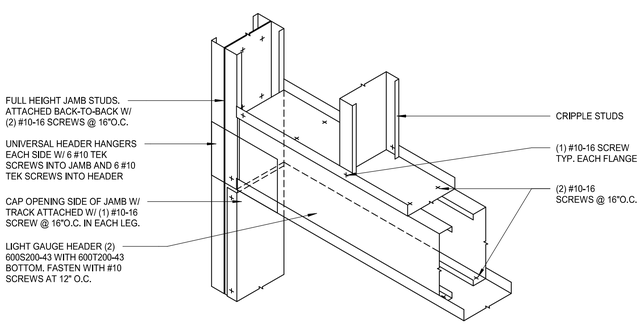

7 LIGHT GAUGE HEADER

3/4" = 1'-0"

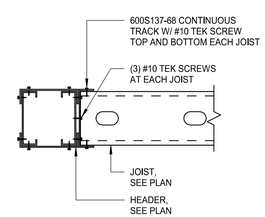

8 JOIST TO HEADER ATTACHMENT

1 1/2" = 1'-0"

BLISS & NYITRAY, INC.
STRUCTURAL ENGINEERS
FL Certificate of Authorization No. 674
www.bniengineers.com BNI Proj. No.22103,63
10440 N. Central Expressway, Ste 1530
Dallas, Texas 75231
Tel. (214) 432-8232
Gabriel J. Leitz, P.E. FL Reg. No. 81348

To the best of the Structural Engineer's knowledge, the Plans and Specifications comply with the applicable minimum building codes.

PERMIT SET - FOR CONSTRUCTION USE

© 2022 STARBUCKS COFFEE COMPANY

STARBUCKS®
2401 UTAH AVENUE SOUTH
SEATTLE, WASHINGTON 98134
(206) 318-1575

THESE DRAWINGS AND THE PROJECT MANUAL ARE CONFIDENTIAL AND SHALL REMAIN THE SOLE PROPERTY OF STARBUCKS CORPORATION, WHICH IS THE OWNER OF THE COPYRIGHT IN THIS WORK. THEY SHALL NOT BE REPRODUCED (IN WHOLE OR IN PART), SHARED WITH THIRD PARTIES OR USED IN ANY MANNER ON OTHER PROJECTS OR EXTENSIONS TO THIS PROJECT WITHOUT THE PRIOR WRITTEN CONSENT OF STARBUCKS CORPORATION. THESE DRAWINGS AND SPECIFICATIONS ARE INTENDED TO EXPRESS DESIGN INTENT FOR A PROTOTYPICAL STARBUCKS STORE (WHICH IS SUBJECT TO CHANGE AT ANYTIME) AND DO NOT REFLECT ACTUAL SITE CONDITIONS. NEITHER PARTY SHALL HAVE ANY OBLIGATION NOR LIABILITY TO THE OTHER (EXCEPT STATED ABOVE) UNTIL A WRITTEN AGREEMENT IS FULLY EXECUTED BY BOTH PARTIES.

STARBUCKS TEMPLATE VERSION: i2024.01.29

Digitally signed by Gabriel J. Leitz
Reason: I am the author of this document
Location: Dallas, Texas
Date: 2024.03.20 08:45:04-05'00'

Printed on any electronic copies. Date: 2024.03.20 08:45:04'00'

GABRIEL J. LEITZ
LICENSE
NO. 81348
STATE OF FLORIDA
PROFESSIONAL ENGINEER

Gabriel J. Leitz, P.E. FL Reg. No. 81348

Gensler
MAIN OFFICE
M. ARTHUR GENSLER JR. & ASSOCIATES
FL QUALIFIER'S LIC. NO. AR99486
45 FREMONT ST, SUITE 1500
SAN FRANCISCO, CA 94105 USA
Tel (415) 433.3700
Fax (415) 836.4599
SATELLITE OFFICE
M. ARTHUR GENSLER JR. & ASSOCIATES
FL QUALIFIER'S LIC. NO. AA0002837
545 NW 26TH ST
SUITE 250
MIAMI, FL 33127 USA
Tel (305) 350.7070
Fax (305) 350.7071

PROJECT NAME:
NW 43RD & 53RD

PROJECT ADDRESS:
5480 NW 43RD STREET
GAINESVILLE, FL 32653

STORE #:	10820
PROJECT #:	34769-081
ISSUE DATE:	03-20-2024
DESIGN MANAGER:	ES
PRODUCTION DESIGNER:	RV
CHECKED BY:	AP

Revision Schedule

Rev	Date	By	Description

SHEET TITLE:
LIGHT GAUGE DETAILS

SCALE: AS SHOWN

SHEET NUMBER:
S3.01

SYMBOL MODIFIERS (INCLUDING COMBINATIONS), ACRONYMS, AND ABBREVIATONS

GENERAL SYMBOL MODIFIERS (APPLY TO ALL)

- +XX" MOUNTING HEIGHT TO CENTER OF BOX (OVERRIDES DEFAULT MOUNTING HEIGHT)
- ACH 6 INCHES ABOVE COUNTERTOP/BACKSPLASH TO CENTER OF BOX
- EM EMERGENCY
- GFCI GROUND-FAULT CIRCUIT INTERRUPTER (4 TO 6 MILLIAMP TRIP)
- H HORIZONTAL MOUNT
- PT POKE-THROUGH
- WP WEATHERPROOF

RECEPTACLE MODIFIERS

- CH CLOCK HANGER
- CR CONTROLLED
- HG HOSPITAL GRADE
- IG ISOLATED GROUND
- SP SURGE PROTECTION
- SR SHOW WINDOW. MOUNTED WITHIN 18 INCHES OF TOP OF SHOW WINDOW
- TR TAMPER-RESISTANT
- USB DEVICE WITH USB PORT(S)

SWITCHES AND CONTROLS MODIFIERS

- 2 DPST
- 3 THREE-WAY
- 4 FOUR-WAY
- a,b,c... CONTROL AND LOAD ASSOCIATION
- D DIMMER
- DTC SPDT, CENTER OFF, MAINTAINED CONTACT
- DTM SPDT, CENTER OFF, MOMENTARY CONTACT
- F BOX COVER UNIT, BUSSMANN SSU SERIES
- G GLOW HANDLE (HANDLE GLOWS WHEN SWITCH IS OFF)
- K KEY OPERATED
- LV LOW VOLTAGE
- LVD LOW VOLTAGE DIMMER
- M MANUAL MOTOR CONTROLLER WITH OVERLOAD HEATER
- OR OVERRIDE WITH TIMER
- OS1 SINGLE-RELAY OCCUPANCY SENSOR
- OS2 DUAL-RELAY OCCUPANCY SENSOR
- OSD DIMMING OCCUPANCY SENSOR
- P PILOT LIGHT (PILOT ON WHEN SWITCH IS ON)
- SB SWITCH BANK (GANGED SWITCHES)
- T TIMER

GENERAL ACRONYMS AND ABBREVIATIONS

- AHJ AUTHORITY HAVING JURISDICTION
- AFF ABOVE FINISHED FLOOR
- AFG ABOVE FINISHED GRADE
- EGC EQUIPMENT GROUNDING CONDUCTOR
- ERMS ARC ENERGY REDUCING MAINTENANCE SWITCH
- FTL FEED-THROUGH LUGS (SUBFEED LUGS ARE ALSO ACCEPTABLE)
- GEC GROUNDING ELECTRODE CONDUCTOR
- GFPE GROUND-FAULT PROTECTION OF EQUIPMENT
- GND GROUND
- N.F. NON-FUSED
- NEC NATIONAL ELECTRICAL CODE (NFPA 70)
- NIC NOT IN CONTRACT
- NL NIGHTLIGHT
- ST SHUNT TRIP
- UNO UNLESS NOTED OTHERWISE
- SPST SINGLE POLE, SINGLE THROW
- DPST DOUBLE POLE, SINGLE THROW
- 3PST THREE POLE, SINGLE THROW
- 4PST FOUR POLE, SINGLE THROW
- SPDT SINGLE POLE, DOUBLE THROW
- DPDT DOUBLE POLE, DOUBLE THROW
- 3PDT THREE POLE, DOUBLE THROW
- 4PDT FOUR POLE, DOUBLE THROW
- NO NORMALLY OPEN
- NC NORMALLY CLOSED

ELECTRICAL SYMBOL LEGEND (SOME MAY NOT BE USED)

	SYMBOL	DESCRIPTION	SYMBOL	DESCRIPTION
RECEPTACLES AND PLUGS		WALL MOUNTED SINGLE RECEPTACLE, NEMA 5-20R		FLUSH FLOOR MOUNTED SINGLE RECEPTACLE, NEMA 5-20R
		WALL MOUNTED DUPLEX RECEPTACLE		FLUSH FLOOR MOUNTED DUPLEX RECEPTACLE
		WALL MOUNTED DEDICATED DUPLEX RECEPTACLE		FLUSH FLOOR MOUNTED DEDICATED DUPLEX RECEPTACLE
		WALL MOUNTED DUPLEX RECEPTACLE, ONE RECEPTACLE SWITCHED OR SPLIT-WIRED		FLUSH FLOOR MOUNTED DUPLEX RECEPTACLE, SPLIT-WIRED
		WALL MOUNTED QUADRUPLEX RECEPTACLE		FLUSH FLOOR MOUNTED QUADRUPLEX RECEPTACLE
		WALL MOUNTED DEDICATED QUADRUPLEX RECEPTACLE		FLUSH FLOOR MOUNTED DEDICATED QUADRUPLEX RECEPTACLE
		WALL MOUNTED QUADRUPLEX RECEPTACLE, SPLIT-WIRED		FLUSH FLOOR MOUNTED QUADRUPLEX RECEPTACLE, SPLIT-WIRED
		WALL MOUNTED SPECIAL RECEPTACLE, NEMA CONFIGURATION AS NOTED		FLUSH FLOOR MOUNTED SPECIAL RECEPTACLE, NEMA CONFIGURATION AS NOTED
		WALL MOUNTED RANGE RECEPTACLE, NEMA 14-50R UNLESS INDICATED OTHERWISE		ABOVE FLOOR SERVICE FITTING, HUBBELL #SC3098A OR EQUAL; NEMA CONFIGURATION AS NOTED
	C	CEILING MOUNTED SINGLE RECEPTACLE, NEMA 5-20R (C=FLUSH CEILING, DC=DROPCORD)	C	CEILING MOUNTED QUADRUPLEX RECEPTACLE (C=FLUSH CEILING, DC=DROPCORD)
	C	CEILING MOUNTED DUPLEX RECEPTACLE (C=FLUSH CEILING, DC=DROPCORD)	C	CEILING MOUNTED DEDICATED QUADRUPLEX RECEPTACLE (C=FLUSH CEILING, DC=DROPCORD)
	C	CEILING MOUNTED DEDICATED DUPLEX RECEPTACLE (C=FLUSH CEILING, DC=DROPCORD)	C	CEILING MOUNTED QUADRUPLEX RECEPTACLE, SPLIT-WIRED (C=FLUSH CEILING, DC=DROPCORD)
	C	CEILING MOUNTED DUPLEX RECEPTACLE, SPLIT-WIRED (C=FLUSH CEILING, DC=DROPCORD)	C	CEILING MOUNTED SPECIAL RECEPTACLE, NEMA CONFIGURATION AS NOTED (C=FLUSH CEILING, DC=DROPCORD)
		MULTI-OUTLET ASSEMBLY		CORD AND PLUG
BOXES	J	WALL MOUNTED JUNCTION/OUTLET BOX	J C	CEILING MOUNTED JUNCTION/OUTLET BOX
	J	FLUSH FLOOR MOUNTED JUNCTION/OUTLET BOX	J	JUNCTION BOX MOUNTED ABOVE CEILING
SWITCHES AND CONTROLS	$	SWITCH, SPST UNLESS INDICATED OTHERWISE, HORSEPOWER RATED WHEN USED IN CONJUNCTION WITH MOTORS		PUSHBUTTON STATION, ONE BUTTON
	OS	CEILING MOUNTED OCCUPANCY SENSOR		PUSHBUTTON STATION, TWO BUTTON
	OS	WALL MOUNTED OCCUPANCY SENSOR		PUSHBUTTON STATION, THREE BUTTON
	PS	CEILING MOUNTED PHOTOSENSOR		SAFETY SWITCH, CHARACTERISTICS AS INDICATED
	MS	CEILING MOUNTED MOTION SENSOR	I	DISCONNECT SWITCH PROVIDED BY EQUIPMENT MANUFACTURER INTEGRAL WITH EQUIPMENT
	TC	AUTOMATIC TIMECLOCK	CB	ENCLOSED CIRCUIT BREAKER, CHARACTERISTICS AS INDICATED
	PC	PHOTOCELL		MAGNETIC MOTOR STARTER
	R	RELAY		COMBINATION MAGNETIC MOTOR STARTER AND DISCONNECT SWITCH, CHARACTERISTICS AS INDICATED
	C	CONTACTOR	VFD	VARIABLE FREQUENCY DRIVE
	ALCR	UL 924 AUTOMATIC LOAD CONTROL RELAY; HUBBELL CONTROL SYSTEMS #ALCR1277 OR EQUAL	GTD	UL 1008 BRANCH CIRCUIT EMERGENCY LIGHTING TRANSFER SWITCH; BODINE #GTD20A OR EQUAL
SIGNAL	B	BELL	B	CHIME
	B	BUZZER		ROTATING BEACON
TELECOMMUNICATIONS		WALL MOUNTED TELEPHONE OUTLET; *P DENOTES NUMBER OF TELEPHONE PORTS		WALL MOUNTED DATA OUTLET; *D DENOTES NUMBER OF DATA PORTS
		FLUSH FLOOR MOUNTED TELEPHONE OUTLET; *P DENOTES NUMBER OF TELEPHONE PORTS		FLUSH FLOOR MOUNTED DATA OUTLET; *D DENOTES NUMBER OF DATA PORTS
	C	CEILING MOUNTED TELEPHONE OUTLET; *P DENOTES NUMBER OF TELEPHONE PORTS	C	CEILING MOUNTED DATA OUTLET; *D DENOTES NUMBER OF DATA PORTS
		WALL MOUNTED COMBINATION TELEPHONE AND DATA OUTLET; *P/*D DENOTES NUMBER OF TELEPHONE/DATA PORTS		FLUSH FLOOR MOUNTED COMBINATION TELEPHONE AND DATA OUTLET; *P/*D DENOTES NUMBER OF TELEPHONE/DATA PORTS
	WAP	WIRELESS ACCESS POINT	C	CEILING MOUNTED COMBINATION TELEPHONE AND DATA OUTLET; *P/*D DENOTES NUMBER OF TELEPHONE/DATA PORTS
RACEWAYS AND CIRCUITRY		CIRCUITRY, CONCEALED IN WALL OR CEILING	P	POWER POLE
		CIRCUITRY, CONCEALED IN OR UNDER FLOOR	T	TELECOMMUNICATIONS POLE
		CIRCUITRY, EXPOSED	TP	TWO-CHANNEL TELECOMMUNCATIONS AND POWER POLE
		CIRCUIT HOMERUN. THE NUMBER OF ARROWS INDICATES THE NUMBER OF CIRCUITS. TWO WIRES UNLESS NOTED OTHERWISE; SLASHES INDICATE NUMBER OF WIRES. EQUIPMENT GROUND WIRE IS REQUIRED BUT NOT INDICATED. A 7 INDICATES ISOLATED GROUND CONDUCTOR.	---UCP---	UNDERCARPET FLAT CONDUCTOR CABLE WIRING SYSTEM, POWER
			---UCT---	UNDERCARPET FLAT CONDUCTOR CABLE WIRING SYSTEM, TELEPHONE
			---UCD---	UNDERCARPET FLAT CONDUCTOR CABLE WIRING SYSTEM, DATA
		CONDUIT STUB		WIRE LOOP FOR FUTURE CONNECTION, 10'-0" MINIMUM SLACK
		CONDUIT/CIRCUIT BREAK AND CONTINUED ELSEWHERE		VERTICAL CONDUIT/CIRCUIT
MISCELLANEOUS		METER AND SOCKET	M	MOTOR
		LIGHTING AND APPLIANCE PANELBOARD, SURFACE MOUNTED	XX RPS	REMOTE LIGHTING POWER SUPPLY/TRANSFORMER; (XX = WATT RATING)
		LIGHTING AND APPLIANCE PANELBOARD, FLUSH MOUNTED	XX	TRACK LIGHTING END FEED; (XX = CURRENT LIMITER RATING, IF APPLICABLE)
		OTHER EQUIPMENT AS NOTED	TR	LOW VOLTAGE CONTROL TRANSFORMER
SECURITY SYSTEMS		WALL MOUNTED CCTV CAMERA	C	CEILING MOUNTED CCTV CAMERA
	MTV	CCTV MONITOR OUTLET		CEILING MOUNTED CCTV CAMERA WITH DOME COVER
	CACP	CONTROLLED ACCESS CONTROL PANEL	PE	CONTROLLED ACCESS "PUSH TO EXIT" PUSHBUTTON
	ES	CONTROLLED ACCESS ELECTRIC DOOR STRIKE	CR	CONTROLLED ACCESS CARD READER
	DR	CONTROLLED ACCESS ELECTRIC DOOR STRIKE RELEASE SENSOR	BR	CONTROLLED ACCESS BIOMETRIC READER
	ML	CONTROLLED ACCESS MAGNETIC LOCK	CKP	CONTROLLED ACCESS KEYPAD
	BCP	INTRUSION DETECTION CONTROL PANEL	DC	INTRUSION DETECTION DOOR CONTACT
	BKP	INTRUSION DETECTION SECURITY KEYPAD	GB	INTRUSION GLASS BREAK SENSOR
	M	CEILING MOUNTED INTRUSION DETECTION MOTION SENSOR	GB C	CEILING MOUNTED INTRUSION GLASS BREAK SENSOR
	M	WALL MOUNTED INTRUSION DETECTION MOTION SENSOR	HU	INTRUSION HOLD-UP BUTTON

PERMIT SET - FOR CONSTRUCTION USE

© 2022 STARBUCKS COFFEE COMPANY

STARBUCKS®
2401 UTAH AVENUE SOUTH
SEATTLE, WASHINGTON 98134
(206) 318-1575

THESE DRAWINGS AND THE PROJECT MANUAL ARE CONFIDENTIAL AND SHALL REMAIN THE SOLE PROPERTY OF STARBUCKS CORPORATION, WHICH IS THE OWNER OF THE COPYRIGHT IN THIS WORK. THEY SHALL NOT BE REPRODUCED (IN WHOLE OR IN PART), SHARED WITH THIRD PARTIES OR USED IN ANY MANNER ON OTHER PROJECTS OR EXTENSIONS TO THIS PROJECT WITHOUT THE PRIOR WRITTEN CONSENT OF STARBUCKS CORPORATION. THESE DRAWINGS AND SPECIFICATIONS ARE INTENDED TO EXPRESS DESIGN INTENT FOR A PROTOTYPICAL STARBUCKS STORE (WHICH IS SUBJECT TO CHANGE AT ANYTIME) AND DO NOT REFLECT ACTUAL SITE CONDITIONS. NEITHER PARTY SHALL HAVE ANY OBLIGATION NOR LIABILITY TO THE OTHER (EXCEPT STATED ABOVE) UNTIL A WRITTEN AGREEMENT IS FULLY EXECUTED BY BOTH PARTIES.

STARBUCKS TEMPLATE VERSION: i2023.08.28

GREGORY ROY SCHNACKEL LICENSE No PE 0048442 STATE OF FLORIDA PROFESSIONAL ENGINEER

Digitally signed by Gregory R Schnackel
Date: 2024.03.20 16:14:14-05'00'

Date: 03/20/24 COA#: 28403

Gensler
MAIN OFFICE
M. ARTHUR GENSLER JR. & ASSOCIATES
FL QUALIFIER'S LIC. NO. AR96486
220 MONTGOMERY STREET, SUITE 200
SAN FRANCISCO, CA 94104 USA
Tel (415) 433.3700
Fax (415) 836.4599

SATELLITE OFFICE
M. ARTHUR GENSLER JR. & ASSOCIATES
545 NW 26TH ST
SUITE 250
MIAMI, FL 33127 USA
Tel (305) 350.7070
Fax (305) 350.7071

PROJECT NAME:
NW 43RD & 53RD

PROJECT ADDRESS:
5480 NW 43RD STREET
GAINESVILLE, FL 32653

STORE #: 10820
PROJECT #: 34769-081
ISSUE DATE: 03-15-2024
DESIGN MANAGER:
PRODUCTION DESIGNER: SEI
CHECKED BY: GRS

Revision Schedule

Rev	Date	By	Description

Schnackel engineers
New York ■ Miami ■ Omaha ■ Los Angeles ■ Seattle ■ Honolulu
800-581-0963 www.schnackel.com

SHEET TITLE:
ELECTRICAL LEGEND

SCALE: AS SHOWN

SHEET NUMBER:
E001

SE JOB#: 240195

ELECTRICAL GENERAL NOTES

A. ANY EXISTING CONDITIONS INDICATED IN THIS SET OF DRAWINGS ARE BASED ON INFORMATION PROVIDED BY OTHERS AND POSSIBLE LIMITED FIELD VERIFICATION. ADJUST FOR ACTUAL FIELD CONDITIONS AT NO ADDITIONAL EXPENSE TO THE OWNER.

B. VISIT THE PROJECT SITE, REVIEW EXISTING CONDITIONS AGAINST THE CONTRACT DOCUMENTS, AND BECOME FAMILIAR WITH THE WORK PRIOR TO BIDDING AND START OF WORK. SIGNING THE CONTRACT IS AN ACKNOWLEDGEMENT THAT THE SITE VISIT HAS BEEN COMPLETED AND THE EXISTING CONDITIONS ARE ACCEPTED.

C. COORDINATE THE CONNECTIONS OF ALL EQUIPMENT PROVIDED BY OTHERS WITH THE CONTRACTOR PROVIDING THE EQUIPMENT PRIOR TO ROUGH-IN. THIS INCLUDES, BUT IS NOT LIMITED TO, MECHANCIAL EQUIPMENT, KITCHEN EQUIPMENT, AUDIO/VISUAL EQUIPMENT, FIRE SUPPRESSION SYSTEM EQUIPMENT, FIRE ALARM EQUIPMENT, ETC. PROVIDE THE APPROPRIATE DISCONNECTING MEANS FOR, AND TO MAKE THE FINAL CONNECTION TO, ANY HARDWIRED EQUIPMENT. THE ELECTRICAL CONTRACTOR IS ALSO RESPONSIBLE TO PROVIDE AN APPROPRIATE CORD AND PLUG FOR ANY CORD AND PLUG CONNECTED EQUIPMENT THAT IS NOT EQUIPPED WITH AN INTEGRAL CORD AND PLUG.

D. SEE PANEL SCHEDULES FOR INFORMATION ON CIRCUITS THAT ARE TO BE ROUTED THROUGH CONTACTORS OR RELAYS FOR CONTROL.

E. PRESERVE THE FIRE RATING OF ANY FIRE-RATED CEILING ASSEMBLY BY PROVIDING THE APPROPRIATE FIRE-RATED LUMINAIRE TENTS AS MANUFACTURED BY TENANT OR NELSON FIRESTOP OR BY BUILDING FIRE-RATED ENCLOSURES AROUND EACH LUMINAIRE THAT IS RECESSED INTO THE FIRE-RATED ASSEMBLY. COORDINATE FIRE-RATED CEILING ASSEMBLY LOCATIONS WITH THE ARCHITECTURAL DRAWINGS.

F. ALL EQUIPMENT, DEVICES AND LUMINAIRES SHALL BE SUITABLE FOR THE ENVIRONMENT IN WHICH THEY ARE INSTALLED. EQUIPMENT MOUNTED OUTDOORS SHALL BE NEMA 3R. DEVICES MOUNTED IN DAMP OR WET LOCATIONS SHALL BE WEATHERPROOF. RECEPTACLES RATED 15- OR 20-AMPS AND 120 VOLTS WHICH ARE LOCATED IN DAMP OR WET LOCATIONS SHALL BE GFCI PROTECTED AND EQUIPPED WITH A SUITABLE WEATHERPROOF COVERPLATE (WHILE-IN-USE IN WET LOCATIONS).

G. ALL LUGS, TERMINALS, ETC. IN ELECTRICAL DISTRIBUTION EQUIPMENT SHALL BE LISTED FOR A MINIMUM OF 75 DEGREE C CONDITIONS. TERMINATIONS LISTED FOR ONLY 60 DEGREE C CONDITIONS ARE NOT PERMITTED.

H. CONDUCTORS #12 AND SMALLER SHALL BE SOLID. CONDUCTORS #10 AWG AND LARGER ARE PERMITTED TO BE STRANDED.

ELECTRICAL KEYED NOTES

1 PROVIDE FINAL CONNECTION TO SIGN. REUSE EXISTING BRANCH CIRCUIT, ROUTE THROUGH TIMECLOCK, C-3.

SITE SCHEDULE	
Mark	Equipment Description
23074	SIGN - DT EXIT ONLY
23083	SIGN - DT DIRECTIONAL ARROW

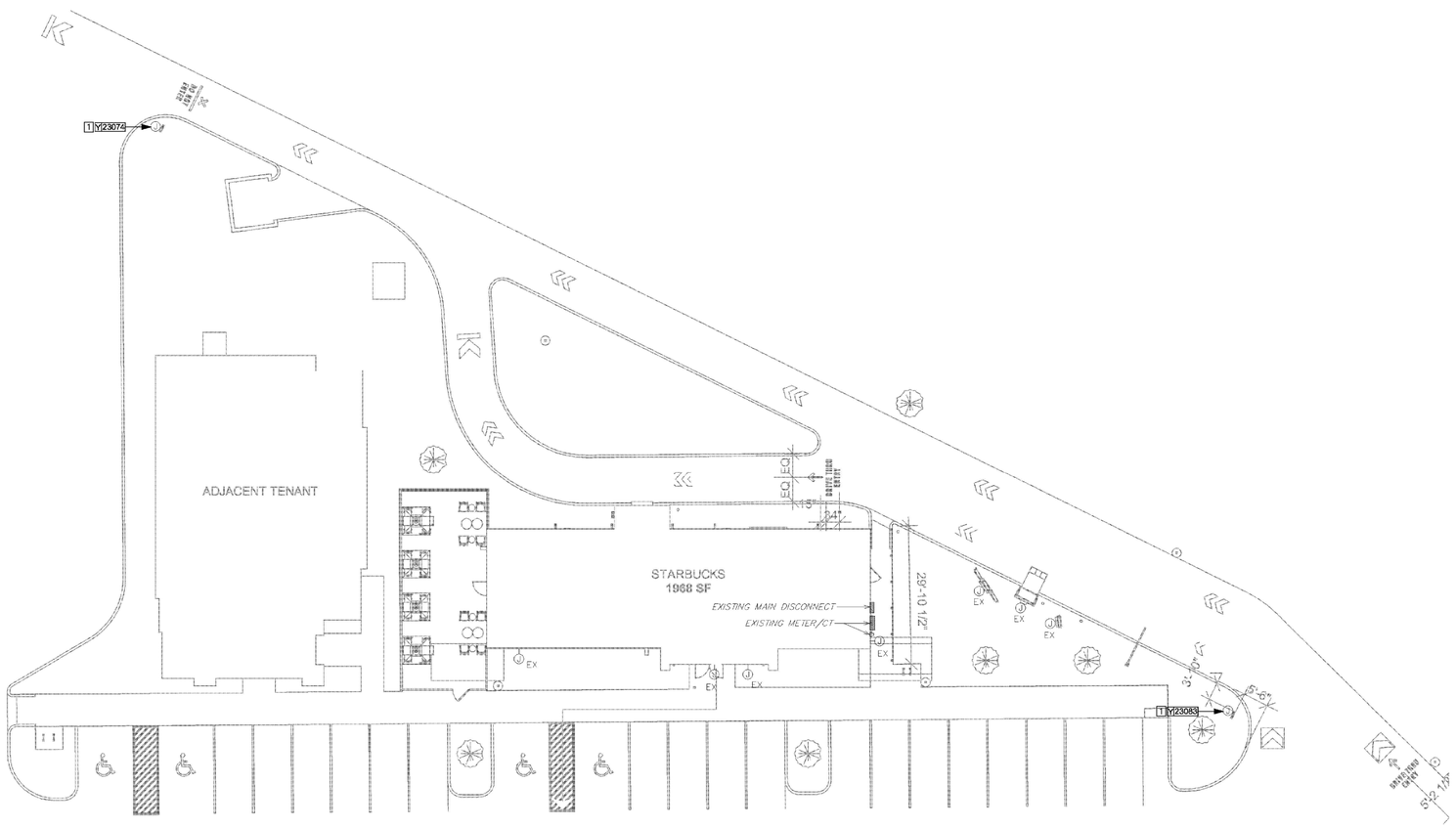

1 ELECTRICAL SITE PLAN
Scale: 1/16" = 1'

N

LEGEND
EXISTING
NEW WORK
NEW TO EXISTING CONNECTION

Schnackel engineers
New Yorkers Miami Orlando Los Angeles Austin Honolulu
800-381-0963 www.schnackel.com

PERMIT SET - FOR CONSTRUCTION USE

© 2022 STARBUCKS COFFEE COMPANY

STARBUCKS®
2401 UTAH AVENUE SOUTH
SEATTLE, WASHINGTON 98134
(206) 318-1575

THESE DRAWINGS AND THE PROJECT MANUAL ARE CONFIDENTIAL AND SHALL REMAIN THE SOLE PROPERTY OF STARBUCKS CORPORATION, WHICH IS THE OWNER OF THE COPYRIGHT IN THIS WORK. THEY SHALL NOT BE REPRODUCED (IN WHOLE OR IN PART), SHARED WITH THIRD PARTIES OR USED IN ANY MANNER ON OTHER PROJECTS OR EXTENSIONS TO THIS PROJECT WITHOUT THE PRIOR WRITTEN CONSENT OF STARBUCKS CORPORATION. THESE DRAWINGS AND SPECIFICATIONS ARE INTENDED TO EXPRESS DESIGN INTENT FOR A PROTOTYPICAL STARBUCKS STORE (WHICH IS SUBJECT TO CHANGE AT ANYTIME) AND DO NOT REFLECT ACTUAL SITE CONDITIONS. NEITHER PARTY SHALL HAVE ANY OBLIGATION NOR LIABILITY TO THE OTHER (EXCEPT STATED ABOVE) UNTIL A WRITTEN AGREEMENT IS FULLY EXECUTED BY BOTH PARTIES.

STARBUCKS TEMPLATE VERSION: i2023.08.28

GREGORY ROY SCHNACKEL
LICENSE
No PE 0048442
STATE OF FLORIDA
PROFESSIONAL ENGINEER

Digitally signed by Gregory R Schnackel
Date: 2024.03.20 16:14:21-05'00'

Date: 03/20/24 COA#: 28403

Gensler
MAIN OFFICE
M. ARTHUR GENSLER JR. & ASSOCIATES
FL QUALIFIER LIC. NO. AR26498
220 MONTGOMERY STREET, SUITE 200
SAN FRANCISCO, CA 94104 USA
Tel: (415) 433.3700
Fax: (415) 836.4599
SATELLITE OFFICE
M. ARTHUR GENSLER JR. & ASSOCIATES
545 NW 26TH ST
SUITE 250
MIAMI, FL 33127 USA
Tel: (305) 350.7079
Fax: (305) 350.7071

PROJECT NAME:
NW 43RD & 53RD

PROJECT ADDRESS:
5480 NW 43RD STREET
GAINESVILLE, FL 32653

STORE #:	10820
PROJECT #:	34769-081
ISSUE DATE:	03-15-2024
DESIGN MANAGER:	
PRODUCTION DESIGNER:	SEI
CHECKED BY:	GRS

Revision Schedule

Rev	Date	By	Description

SHEET TITLE:
ELECTRICAL SITE PLAN

SCALE: AS SHOWN

SHEET NUMBER:
E100

SE JOB#: 240195

Appliance Electrical Connection Inputs

Mark	Equipment Description	Voltage System	Load	Load Units	Cord and Plug Rating	Rough-in Height
10005	MUSIC PLAYER	120V, 1 Phase, 2 Wire	3.0	Amps	5-15P	18
10007	INKJET PRINTER	120V, 1 Phase, 2 Wire	591.0	VA (Watts)	5-15P	18
10012	D/T COMM SYSTEM	120V, 1 Phase, 2 Wire	2.5	Amps	5-15P	96
10022	MONEY COUNTER	120V, 1 Phase, 2 Wire	2.5	Amps	5-15P	18
10075	CUP LABELER	120V, 1 Phase, 2 Wire	1.7	Amps	5-15P	26
10267	UC REFRIG	120V, 1 Phase, 2 Wire	4.0	Amps	5-15P	26
12336	DT TIMER SYSTEM	120V, 1 Phase, 2 Wire	180.0	VA (Watts)	5-15P	81
17564	RINSER SENSOR	120V, 1 Phase, 2 Wire	180.0	VA (Watts)	5-15P	26
21215	FOOD CASE	206V, 1 Phase, 2 Wire	8.4	Amps	None	0
21679	NITRO GENERATOR	120V, 1 Phase, 2 Wire	6.0	Amps	5-15P	26
22642	HOT WATER DISPENSER	120V, 1 Phase, 2 Wire	1500	VA (Watts)	5-15P	26
22885	CLOVER BREWER	120/208V, 1 Phase, 3 Wire	40	Amps	14-50P	28
23181	ICE MACHINE, HEAD	120V, 1 Phase, 2 Wire	5	Amps	None	72
23181	ICE MACHINE, REMOTE CONDEN	206V, 1 Phase, 2 Wire	6200	Watts	None	ROOF
23419	MILK DISPENSER	120V, 1 Phase, 2 Wire	200	VA (Watts)	5-15P	80
23421	ICE DISPENSER	120V, 1 Phase, 2 Wire	10	Amps	5-15P	80
23423	ICE DIVERTER	120V, 1 Phase, 2 Wire	1.5	Amps	5-15P	80
23424	ICE DIVERTER CONTROL PANEL	120V, 1 Phase, 2 Wire	0	Amps	---	80
23440	WARMING WALL 1000	206V, 1 Phase, 2 Wire	28.7	Amps	6-30P	28
23443	COMBI-OVEN	206V, 3 Phase, 3 Wire	23.6	Amps	15-50P	28

ELECTRICAL KEYED NOTES

1. PROVIDE FINAL CONNECTION TO MILLWORK & COMMUNITY TABLE RECEPTACLES. COORDINATE FINAL LOCATION AND REQUIREMENTS WITH MANUFACTURER PRIOR TO ROUGH-IN.
2. PROVIDE FINAL CONNECTION TO ICE DIVERTER CONTROL PANEL.
3. INDOOR UNIT OF SPLIT-SYSTEM IS POWERED FROM OUTDOOR UNIT. PROVIDE ELECTRICAL CONNECTION BETWEEN UNITS PER MANUFACTURER REQUIREMENTS. COORDINATE ALL ELECTRICAL REQUIREMENTS, FINAL UNIT LOCATIONS, AND CIRCUIT ROUTING WITH MECHANICAL CONTRACTOR PRIOR TO ROUGH-IN.

ELECTRICAL RELOCATION NOTES

1. FOR EACH RELOCATED EQUIPMENT, MATCH RECEPTACLE NEMA CONFIGURATION AND WIRE GAUGE, EXTED BRANCH CIRCUIT AS REQUIRED TO COMPLETE THE CONNECTION AND IF NOT ALREADY PRESENT, PROVIDE NEW GFCI CIRCUIT BREAKER. DO NOT ABANDON EXISTING WORK.
2. RELOCATED REACH-IN REFRIGERATOR.
3. RELOCATED REACH-IN FREEZER.

ELECTRICAL GENERAL NOTES

A. ANY EXISTING CONDITIONS INDICATED IN THIS SET OF DRAWINGS ARE BASED ON INFORMATION PROVIDED BY OTHERS AND POSSIBLE LIMITED FIELD VERIFICATION. ADJUST FOR ACTUAL FIELD CONDITIONS AT NO ADDITIONAL EXPENSE TO THE OWNER.

B. VISIT THE PROJECT SITE, REVIEW EXISTING CONDITIONS AGAINST THE CONTRACT DOCUMENTS, AND BECOME FAMILIAR WITH THE WORK PRIOR TO BIDDING AND START OF WORK. SIGNING THE CONTRACT IS AN ACKNOWLEDGEMENT THAT THE SITE VISIT HAS BEEN COMPLETED AND THE EXISTING CONDITIONS ARE ACCEPTED.

C. ANY EXISTING FIRE ALARM SYSTEM SHALL REMAIN IN OPERATION THROUGHOUT CONSTRUCTION. AUTOMATIC SMOKE DETECTORS IN THE AREA OF CONSTRUCTION SHALL BE DISCONNECTED AND TEMPORARILY REPLACED WITH HEAT DETECTORS WHEN THE SPACE IS STAFFED BY THE CONTRACTOR IN ACCORDANCE WITH THE APPROVED FIRE SAFETY PROCEDURES OF THE OWNER AND THE LOCAL FIRE MARSHAL, BUT SHALL BE REACTIVATED WHENEVER THE SPACE IS NOT OCCUPIED BY THE CONTRACTOR. AUTOMATIC SMOKE DETECTORS SHALL BE PROTECTED FROM DUST AND DIRT ACCUMULATION BY REMOVING THE DEVICE FROM ITS BASE DURING THOSE TIMES WHEN THE SYSTEM IS ALLOWED TO BE OUT OF OPERATION.

D. DEMOLISH ANY EXISTING EQUIPMENT, DEVICES, AND LUMINAIRES AS INDICATED AND/OR AS REQUIRED TO ALLOW FOR INSTALLATION AND CONSTRUCTION OF THE NEW WORK. REMOVE ALL EQUIPMENT, DEVICES, LUMINAIRES, CONDUITS, SUPPORTS, HANGERS, ETC. THAT ARE NOT SHOWN AND ARE REQUIRED TO BE REMOVED IN ORDER TO COMPLETE THE NEW WORK.

E. ELECTRICAL CIRCUITS THAT ARE TO BE REMOVED SHALL BE REMOVED IN THEIR ENTIRETY. CONDUCTORS SHALL BE REMOVED FROM THE ITEM TO BE DEMOLISHED TO THE SOURCE OVERCURRENT DEVICE. RACEWAYS WHICH ARE INSTALLED IN OR BELOW FLOORS OR WITHIN WALLS MAY BE ABANDONED, BUT ALL OVERHEAD OR EXPOSED RACEWAYS SHALL BE REMOVED. EXPOSED RACEWAYS TO BE ABANDONED SHALL BE REMOVED AND SHALL BE CUT OR CHISELED AT LEAST 2" INTO THE WALL OR FLOOR AND THE OPENING GROUTED SMOOTH.

F. MAINTAIN CONTINUITY OF EXISTING CIRCUITS AS REQUIRED TO PROVIDE POWER TO REMAINING EQUIPMENT, DEVICES AND LUMINAIRS THAT ARE NOT BEING REMOVED.

G. WHERE THE MECHANICAL DESIGN UTILIZES A PLENUM RETURN AIR CEILING DEISGN, ALL EQUIPMENT AND MATERIALS INSTALLED WITHIN THE PLENUM RETURN CEILING MUST MEET THE FLAME SPREAD AND SMOKE DEVELOPED RATINGS OF 25/50 AND BE APPROVED FOR USE IN PLENUM RETURN CEILINGS. COORDINATED PLENUM CEILING LOCATIONS WITH THE MECHANICAL CONTRACTOR.

H. COORDINATE ALL DEVICE LOCATIONS AND CIRCUIT ROUTING WITHIN ANY MILLWORK WITH MILLWORK VENDOR PRIOR TO ROUGH-IN.

I. COORDINATE THE CONNECTIONS OF ALL EQUIPMENT PROVIDED BY OTHERS WITH THE CONTRACTOR PROVIDING THE EQUIPMENT PRIOR TO ROUGH-IN. THIS INCLUDES, BUT IS NOT LIMITED TO, MECHANCIAL EQUIPMENT, KITCHEN EQUIPMENT, AUDIO/VISUAL EQUIPMENT, FIRE SUPPRESSION SYSTEM EQUIPMENT, FIRE ALARM EQUIPMENT, ETC. PROVIDE THE APPROPRIATE DISCONNECTING MEANS FOR, AND TO MAKE THE FINAL CONNECTION TO, ANY HARDWIRED EQUIPMENT. THE ELECTRICAL CONTRACTOR IS ALSO RESPONSIBLE TO PROVIDE AN APPROPRIATE CORD AND PLUG FOR ANY CORD AND PLUG CONNECTED EQUIPMENT THAT IS NOT EQUIPPED WITH AN INTEGRAL CORD AND PLUG.

J. ALL LUGS, TERMINALS, ETC. IN ELECTRICAL DISTRIBUTION EQUIPMENT SHALL BE LISTED FOR A MINIMUM OF 75 DEGREE C CONDITIONS. TERMINATIONS LISTED FOR ONLY 60 DEGREE C CONDITIONS ARE NOT PERMITTED.

K. CONDUCTORS #12 AND SMALLER SHALL BE SOLID. CONDUCTORS #10 AWG AND LARGER ARE PERMITTED TO BE STRANDED.

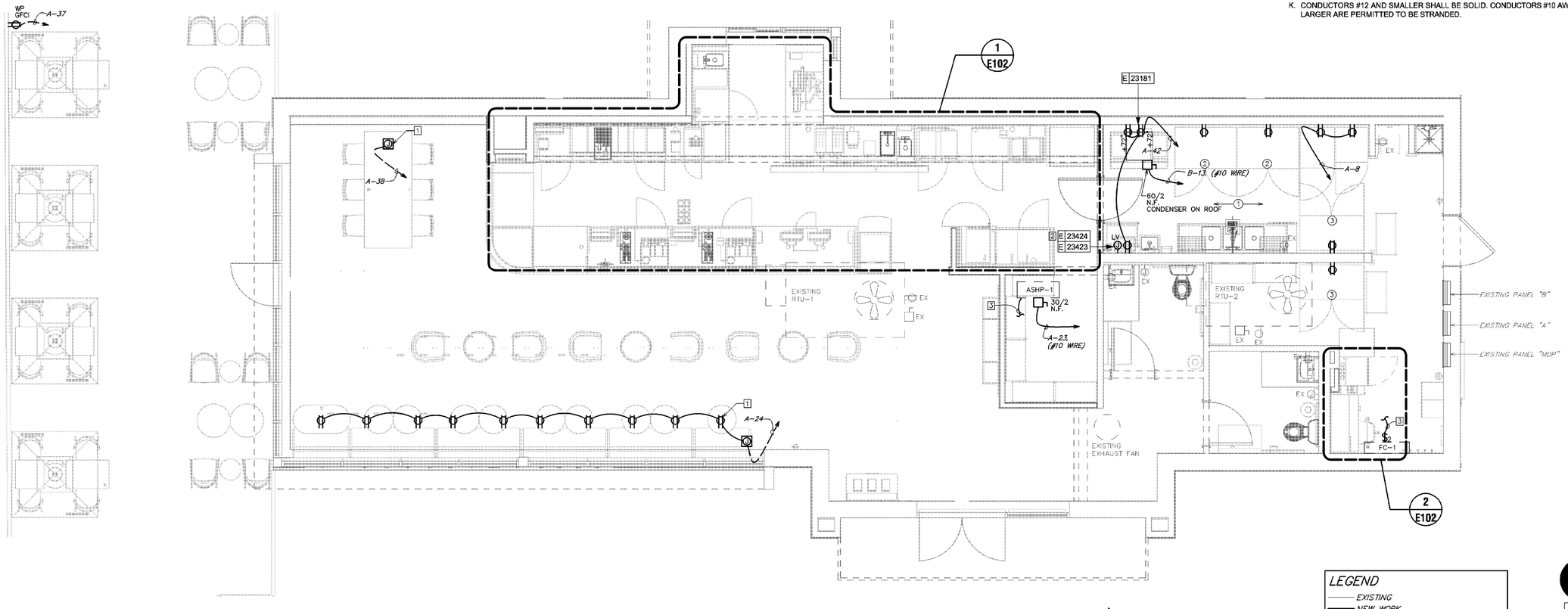

1 POWER AND SYSTEMS PLAN
Scale: 1/4" = 1'-0"

LEGEND
EXISTING
NEW WORK
NEW TO EXISTING CONNECTION

Schnackel engineers
New York • Miami • Orange • Los Angeles • Seattle • Honolulu
800-581-0963 www.schnackel.com

SE JOB#: 240195

PERMIT SET - FOR CONSTRUCTION USE

© 2022 STARBUCKS COFFEE COMPANY

STARBUCKS®
2401 UTAH AVENUE SOUTH
SEATTLE, WASHINGTON 98134
(206) 318-1575

THESE DRAWINGS AND THE PROJECT MANUAL ARE CONFIDENTIAL AND SHALL REMAIN THE SOLE PROPERTY OF STARBUCKS CORPORATION, WHICH IS THE OWNER OF THE COPYRIGHT IN THIS WORK. THEY SHALL NOT BE REPRODUCED (IN WHOLE OR IN PART), SHARED WITH THIRD PARTIES OR USED IN ANY MANNER ON OTHER PROJECTS OR EXTENSIONS TO THIS PROJECT WITHOUT THE PRIOR WRITTEN CONSENT OF STARBUCKS CORPORATION. THESE DRAWINGS AND SPECIFICATIONS ARE INTENDED TO EXPRESS DESIGN INTENT FOR A PROTOTYPICAL STARBUCKS STORE (WHICH IS SUBJECT TO CHANGE AT ANYTIME) AND DO NOT REFLECT ACTUAL SITE CONDITIONS. NEITHER PARTY SHALL HAVE ANY OBLIGATION NOR LIABILITY TO THE OTHER (EXCEPT STATED ABOVE) UNTIL A WRITTEN AGREEMENT IS FULLY EXECUTED BY BOTH PARTIES.

STARBUCKS TEMPLATE VERSION: t2023.08.28

GREGORY ROY SCHNACKEL LICENSE No PE 0048442 STATE OF FLORIDA PROFESSIONAL ENGINEER

Digitally signed by Gregory R Schnackel
Date: 2024.03.20 16:14:28-05'00'

Date: 03/20/24 COA#: 28403

Gensler
MAIN OFFICE
M. ARTHUR GENSLER JR. & ASSOCIATES
FL QUALIFIER S.I.C. NO. A596488
220 MONTGOMERY STREET, SUITE 200
SAN FRANCISCO, CA 94104 USA
Tel: (415) 433.3700
Fax: (415) 836.4599
SATELLITE OFFICE
M. ARTHUR GENSLER JR. & ASSOCIATES
545 NW 26TH ST
S.JITE 250
MIAMI, FL 33127 USA
Tel: (305) 350.7079
Fax: (305) 350.7071

PROJECT NAME:
NW 43RD & 53RD

PROJECT ADDRESS:
5480 NW 43RD STREET
GAINESVILLE, FL 32653

STORE #:	10820
PROJECT #:	34769-081
ISSUE DATE:	03-15-2024
DESIGN MANAGER:	
PRODUCTION DESIGNER:	SEI
CHECKED BY:	GRS

Revision Schedule

Rev	Date	By	Description

SHEET TITLE:
ELECTRICAL LEGEND
SYSTEMS PLAN
SCALE: AS SHOWN

SHEET NUMBER:
E101

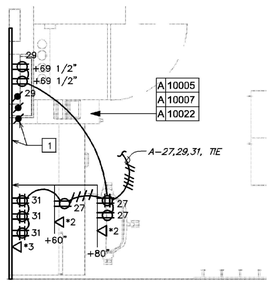

ENLARGED MANAGER'S DESK POWER AND SYSTEMS PLAN

2 Scale: 1/2" = 1'-0"

N

ELECTRICAL KEYED NOTES

1. PROVIDE FIRE-RATED PLYWOOD BACKBOARD AND CONDUIT SLEEVES FOR LOW VOLTAGE CABLE, SEE DETAIL SHEET.
2. PROVIDE POWER AND DATA DEVICES FOR DIGITAL MENU BOARDS. COORDINATE EXACT LOCATION WITH STARBUCKS PROJECT MANAGER PRIOR TO ROUGH-IN.
3. PROVIDE POWER AND DATA DEVICES FOR ORDER STATUS BOARD. SEE DETAIL SHEET FOR MOUNTING LOCATION.

ELECTRICAL RELOCATION NOTES

1. FOR EACH RELOCATED EQUIPMENT, MATCH NEMA CONFIGURATION, WIRE GAUGE, PROVIDE RECEPTACLE IF NOT EXISTING AND EXTEND BRANCH CIRCUIT AS REQUIRED TO COMPLETE THE CONNECTION. DO NOT ABANDON EXISTING WORK. PROVIDE ADDITIONAL CASEWORK PENETRATIONS AS REQUIRED TO PROVIDE THE FINAL EQUIPMENT CONNECTION.
2. RELOCATED (7) UNDER COUNTER REFRIGERATOR.
3. RELOCATED (2) OVENS.
4. RELOCATED (3) CUP LABELERS.
5. RELOCATED (2) BLENDER.
6. RELOCATED POS/SAFE.
7. RELOCATED DT POS.
8. RELOCATED NITRO DISPENSER.
9. RELOCATED GRINDER.

ELECTRICAL GENERAL NOTES

A. ANY EXISTING CONDITIONS INDICATED IN THIS SET OF DRAWINGS ARE BASED ON INFORMATION PROVIDED BY OTHERS AND POSSIBLE LIMITED FIELD VERIFICATION. ADJUST FOR ACTUAL FIELD CONDITIONS AT NO ADDITIONAL EXPENSE TO THE OWNER.

B. VISIT THE PROJECT SITE, REVIEW EXISTING CONDITIONS AGAINST THE CONTRACT DOCUMENTS, AND BECOME FAMILIAR WITH THE WORK PRIOR TO BIDDING AND START OF WORK. SIGNING THE CONTRACT IS AN ACKNOWLEDGEMENT THAT THE SITE VISIT HAS BEEN COMPLETED AND THE EXISTING CONDITIONS ARE ACCEPTED.

C. ANY EXISTING FIRE ALARM SYSTEM SHALL REMAIN IN OPERATION THROUGHOUT CONSTRUCTION. AUTOMATIC SMOKE DETECTORS IN THE AREA OF CONSTRUCTION SHALL BE DISCONNECTED AND TEMPORARILY REPLACED WITH HEAT DETECTORS WHEN THE SPACE IS STAFFED BY THE CONTRACTOR IN ACCORDANCE WITH THE APPROVED FIRE SAFETY PROCEDURES OF THE OWNER AND THE LOCAL FIRE MARSHAL, BUT SHALL BE REACTIVATED WHENEVER THE SPACE IS NOT OCCUPIED BY THE CONTRACTOR. AUTOMATIC SMOKE DETECTORS SHALL BE PROTECTED FROM DUST AND DIRT ACCUMULATION BY REMOVING THE DEVICE FROM ITS BASE DURING THOSE TIMES WHEN THE SYSTEM IS ALLOWED TO BE OUT OF OPERATION.

D. DEMOLISH ANY EXISTING EQUIPMENT, DEVICES, AND LUMINAIRES AS INDICATED AND/OR AS REQUIRED TO ALLOW FOR INSTALLATION AND CONSTRUCTION OF THE NEW WORK. REMOVE ALL EQUIPMENT, DEVICES, LUMINAIRES, CONDUITS, SUPPORTS, HANGERS, ETC. THAT ARE NOT SHOWN AND ARE REQUIRED TO BE REMOVED IN ORDER TO COMPLETE THE NEW WORK.

E. ELECTRICAL CIRCUITS THAT ARE TO BE REMOVED SHALL BE REMOVED IN THEIR ENTIRETY. CONDUCTORS SHALL BE REMOVED FROM THE ITEM TO BE DEMOLISHED TO THE SOURCE OVERCURRENT DEVICE. RACEWAYS WHICH ARE INSTALLED IN OR BELOW FLOORS OR WITHIN WALLS MAY BE ABANDONED, BUT ALL OVERHEAD OR EXPOSED RACEWAYS SHALL BE REMOVED. EXPOSED RACEWAYS TO BE ABANDONED SHALL BE REMOVED AND SHALL BE CUT OR CHISELED AT LEAST 2" INTO THE WALL OR FLOOR AND THE OPENING GROUTED SMOOTH.

F. MAINTAIN CONTINUITY OF EXISTING CIRCUITS AS REQUIRED TO PROVIDE POWER TO REMAINING EQUIPMENT, DEVICES AND LUMINAIRS THAT ARE NOT BEING REMOVED.

G. WHERE THE MECHANICAL DESIGN UTILIZES A PLENUM RETURN AIR CEILING DEISGN, ALL EQUIPMENT AND MATERIALS INSTALLED WITHIN THE PLENUM RETURN CEILING MUST MEET THE FLAME SPREAD AND SMOKE DEVELOPED RATINGS OF 25/50 AND BE APPROVED FOR USE IN PLENUM RETURN CEILINGS. COORDINATED PLENUM CEILING LOCATIONS WITH THE MECHANICAL CONTRACTOR.

H. COORDINATE ALL DEVICE LOCATIONS AND CIRCUIT ROUTING WITHIN ANY MILLWORK WITH MILLWORK VENDOR PRIOR TO ROUGH-IN.

I. COORDINATE THE CONNECTIONS OF ALL EQUIPMENT PROVIDED BY OTHERS WITH THE CONTRACTOR PROVIDING THE EQUIPMENT PRIOR TO ROUGH-IN. THIS INCLUDES, BUT IS NOT LIMITED TO, MECHANCIAL EQUIPMENT, KITCHEN EQUIPMENT, AUDIO/VISUAL EQUIPMENT, FIRE SUPPRESSION SYSTEM EQUIPMENT, FIRE ALARM EQUIPMENT, ETC. PROVIDE THE APPROPRIATE DISCONNECTING MEANS FOR, AND TO MAKE THE FINAL CONNECTION TO, ANY HARDWIRED EQUIPMENT. THE ELECTRICAL CONTRACTOR IS ALSO RESPONSIBLE TO PROVIDE AN APPROPRIATE CORD AND PLUG FOR ANY CORD AND PLUG CONNECTED EQUIPMENT THAT IS NOT EQUIPPED WITH AN INTEGRAL CORD AND PLUG.

J. ALL LUGS, TERMINALS, ETC. IN ELECTRICAL DISTRIBUTION EQUIPMENT SHALL BE LISTED FOR A MINIMUM OF 75 DEGREE C CONDITIONS. TERMINATIONS LISTED FOR ONLY 60 DEGREE C CONDITIONS ARE NOT PERMITTED.

K. CONDUCTORS #12 AND SMALLER SHALL BE SOLID. CONDUCTORS #10 AWG AND LARGER ARE PERMITTED TO BE STRANDED.

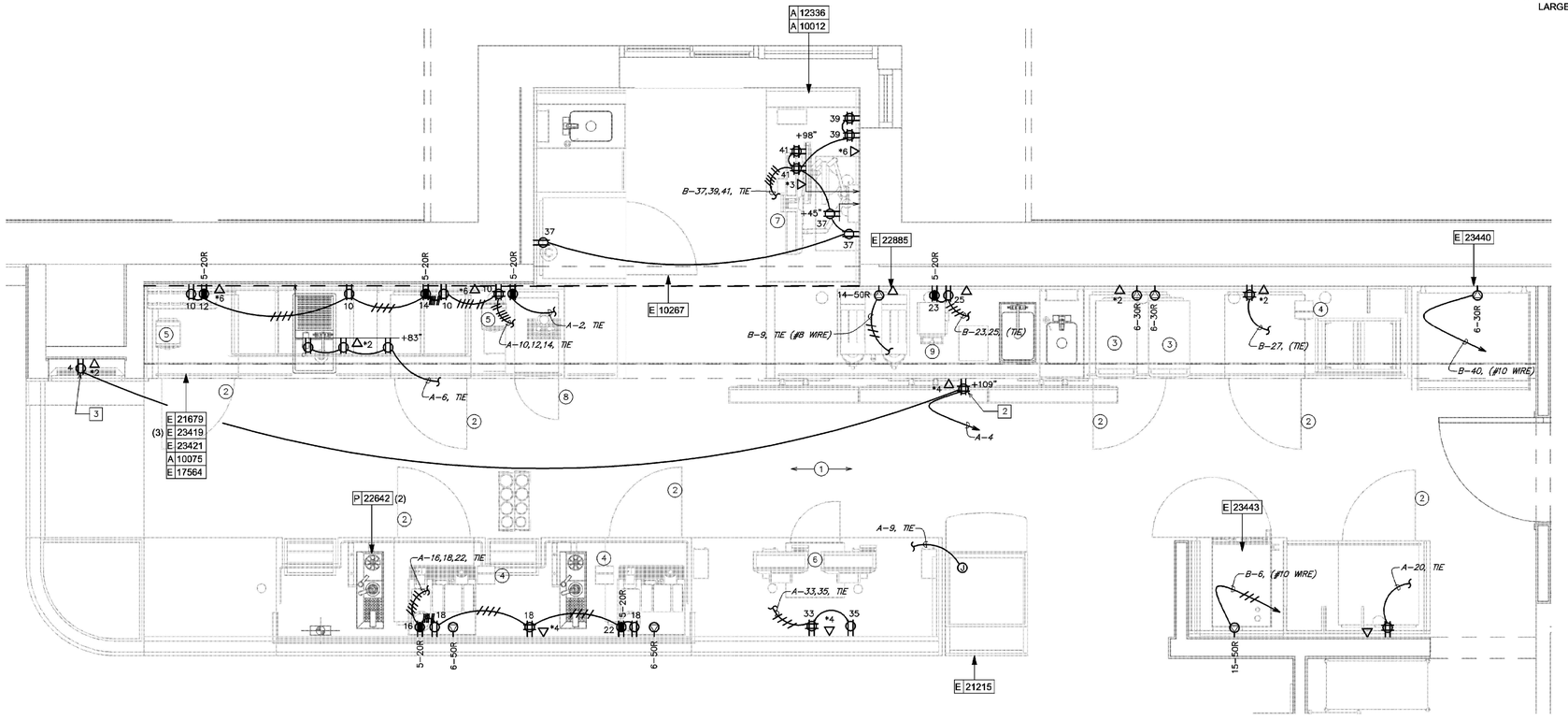

ENLARGED ENGINE POWER AND SYSTEMS PLAN

1 Scale: 1/2" = 1'-0"

N

Schnackel engineers
Boca Raton Miami Orlando Los Angeles Boulder Houston
800-581-0963 www.schnackel.com

PERMIT SET - FOR CONSTRUCTION USE

© 2022 STARBUCKS COFFEE COMPANY

STARBUCKS®
2401 UTAH AVENUE SOUTH
SEATTLE, WASHINGTON 98134
(206) 318-1575

THESE DRAWINGS AND THE PROJECT MANUAL ARE CONFIDENTIAL AND SHALL REMAIN THE SOLE PROPERTY OF STARBUCKS CORPORATION, WHICH IS THE OWNER OF THE COPYRIGHT IN THIS WORK. THEY SHALL NOT BE REPRODUCED (IN WHOLE OR IN PART), SHARED WITH THIRD PARTIES OR USED IN ANY MANNER ON OTHER PROJECTS OR EXTENSIONS TO THIS PROJECT WITHOUT THE PRIOR WRITTEN CONSENT OF STARBUCKS CORPORATION. THESE DRAWINGS AND SPECIFICATIONS ARE INTENDED TO EXPRESS DESIGN INTENT FOR A PROTOTYPICAL STARBUCKS STORE (WHICH IS SUBJECT TO CHANGE AT ANYTIME) AND DO NOT REFLECT ACTUAL SITE CONDITIONS. NEITHER PARTY SHALL HAVE ANY OBLIGATION NOR LIABILITY TO THE OTHER (EXCEPT STATED ABOVE) UNTIL A WRITTEN AGREEMENT IS FULLY EXECUTED BY BOTH PARTIES.

STARBUCKS TEMPLATE VERSION: i2023.08.28

GREGORY ROY SCHNACKEL LICENSE No PE 0048442 STATE OF FLORIDA PROFESSIONAL ENGINEER

Digitally signed by Gregory R Schnackel
Date: 2024.03.20 16:14:35-05'00'

Date: 03/20/24 COA#: 28403

Gensler
MAIN OFFICE
M. ARTHUR GENSLER JR. & ASSOCIATES
FL QUALIFIER'S LIC. NO. AR96488
229 MONTGOMERY STREET, SUITE 200
SAN FRANCISCO, CA 94104 USA
Tel: (415) 433.3700
Fax: (415) 836.4599
SATELLITE OFFICE
M. ARTHUR GENSLER JR. & ASSOCIATES
545 NW 26TH ST
SUITE 250
MIAMI, FL 33127 USA
Tel: (305) 350.7079
Fax: (305) 350.7071

PROJECT NAME:
NW 43RD & 53RD

PROJECT ADDRESS:
5480 NW 43RD STREET
GAINESVILLE, FL 32653

STORE #:	10820
PROJECT #:	34769-081
ISSUE DATE:	03-15-2024
DESIGN MANAGER:	
PRODUCTION DESIGNER:	SEI
CHECKED BY:	GRS

Revision Schedule

Rev	Date	By	Description

SHEET TITLE:
ENLARGED POWER AND SYSTEMS PLANS
SCALE: AS SHOWN

SHEET NUMBER:
E102

SE JOB#: 2401195

SWITCHBANK "SB" SCHEDULE

SWITCH TAG	ZONE DESCRIPTION	CONTROL TYPE
a	CAFÉ RECESSED LIGHTS	LINE VOLTAGE DIMMER
b	CAFÉ ACCENT/COVE LIGHTS	SPST TOGGLE SWITCH
c	CAFÉ TRACK LIGHTS	LINE VOLTAGE DIMMER
d	ENGINE LIGHTS	LINE VOLTAGE DIMMER
e	RESTROOM VESTIBULE	LINE VOLTAGE DIMMER

ELECTRICAL PLAN NOTES

1. INSTALL THIS LUMINAIRE'S REMOTE LOW VOLTAGE LIGHTING POWER SUPPLY (RPS) IN AN INCONSPICUOUS, ACCESSIBLE LOCATION AND PROVIDE FINAL CONNECTION TO LUMINAIRE. COORDINATE MOUNTING LOCATION OF RPS WITH OWNER PRIOR TO ROUGH-IN. THE LENGTH OF CONDUCTORS BETWEEN RPS AND ASSOCIATED LUMINAIRE SHALL NOT EXCEED MANUFACTURER'S RECOMMENDATIONS FOR MAXIMUM CONDUCTOR LENGTH. RPS DESIGNATIONS INDICATED ADJACENT TO LUMINAIRES CORRESPOND TO THE ASSOCIATED RPS SUPPLYING THE LUMINAIRE.
2. PROVIDE LIGHTING CONTROL SWITCHBANK. SEE SWITCHBANK SCHEDULE FOR ADDITIONAL INFORMATION. LOWERCASE LETTERS ADJACENT TO THE LUMINAIRES ON PLANS CORRESPOND TO THE ASSOCIATED SWITCH ON THE SWITCHBANK SCHEDULE.

ELECTRICAL GENERAL NOTES

A. ANY EXISTING CONDITIONS INDICATED IN THIS SET OF DRAWINGS ARE BASED ON INFORMATION PROVIDED BY OTHERS AND POSSIBLE LIMITED FIELD VERIFICATION. ADJUST FOR ACTUAL FIELD CONDITIONS AT NO ADDITIONAL EXPENSE TO THE OWNER.

B. VISIT THE PROJECT SITE, REVIEW EXISTING CONDITIONS AGAINST THE CONTRACT DOCUMENTS, AND BECOME FAMILIAR WITH THE WORK PRIOR TO BIDDING AND START OF WORK. SIGNING THE CONTRACT IS AN ACKNOWLEDGMENT THAT THE SITE VISIT HAS BEEN COMPLETED AND THE EXISTING CONDITIONS ARE ACCEPTED.

C. DEMOLISH ANY EXISTING EQUIPMENT, DEVICES, AND LUMINAIRES AS INDICATED AND/OR AS REQUIRED TO ALLOW FOR INSTALLATION AND CONSTRUCTION OF THE NEW WORK. REMOVE ALL EQUIPMENT, DEVICES, LUMINAIRES, CONDUITS, SUPPORTS, HANGERS, ETC. THAT ARE NOT SHOWN AND ARE REQUIRED TO BE REMOVED IN ORDER TO COMPLETE THE NEW WORK.

D. ELECTRICAL CIRCUITS THAT ARE TO BE REMOVED SHALL BE REMOVED IN THEIR ENTIRETY. CONDUCTORS SHALL BE REMOVED FROM THE ITEM TO BE DEMOLISHED TO THE SOURCE OVERCURRENT DEVICE. RACEWAYS WHICH ARE INSTALLED IN OR BELOW FLOORS OR WITHIN WALLS MAY BE ABANDONED, BUT ALL OVERHEAD OR EXPOSED RACEWAYS SHALL BE REMOVED. EXPOSED RACEWAYS TO BE ABANDONED SHALL BE REMOVED AND SHALL BE CUT OR CHISELED AT LEAST 2" INTO THE WALL OR FLOOR AND THE OPENING GROUTED SMOOTH.

E. MAINTAIN CONTINUITY OF EXISTING CIRCUITS AS REQUIRED TO PROVIDE POWER TO REMAINING EQUIPMENT, DEVICES AND LUMINAIRS THAT ARE NOT BEING REMOVED.

F. WHERE THE MECHANICAL DESIGN UTILIZES A PLENUM RETURN AIR CEILING DESIGN, ALL EQUIPMENT AND MATERIALS INSTALLED WITHIN THE PLENUM RETURN CEILING MUST MEET THE FLAME SPREAD AND SMOKE DEVELOPED RATINGS OF 25/50 AND BE APPROVED FOR USE IN PLENUM RETURN CEILINGS. COORDINATE PLENUM CEILING LOCATIONS WITH THE MECHANICAL CONTRACTOR. LUMINAIRES THAT ARE MANUFACTURED WITH A METAL HOUSING MEET THIS REQUIREMENT AND ARE NOT REQUIRED TO BE PLENUM RATED UNLESS INDICATED OTHERWISE.

G. SEE PANEL SCHEDULES FOR INFORMATION ON CIRCUITS THAT ARE TO BE ROUTED THROUGH CONTACTORS OR RELAYS FOR CONTROL.

H. PRESERVE THE FIRE RATING OF ANY FIRE-RATED CEILING ASSEMBLIES BY PROVIDING THE APPROPRIATE FIRE-RATED LUMINAIRE TENTS AS MANUFACTURED BY TENANT OR NELSON FIRESTOP OR BY BUILDING FIRE-RATED ENCLOSURES AROUND EACH LUMINAIRE THAT IS RECESSED INTO THE FIRE-RATED ASSEMBLY. COORDINATE FIRE-RATED CEILING ASSEMBLY LOCATIONS WITH THE ARCHITECTURAL DRAWINGS.

I. ALL LUGS, TERMINALS, ETC. IN ELECTRICAL DISTRIBUTION EQUIPMENT SHALL BE LISTED FOR A MINIMUM OF 75 DEGREE C CONDITIONS. TERMINATIONS LISTED FOR ONLY 60 DEGREE C CONDUCTORS ARE NOT PERMITTED.

J. CIRCUITS SERVING EMERGENCY LIGHTING EQUIPMENT SUCH AS EMERGENCY BATTERIES SHALL NOT SHARE A NEUTRAL (SHALL NOT BE PART OF A MULTIWIRE BRANCH CIRCUIT) WITH ANY OTHER CIRCUIT. PROVIDE A SEPARATE NEUTRAL FOR EVERY CIRCUIT THAT SERVES EMERGENCY LIGHTING.

K. ALTHOUGH NOT SPECIFICALLY SHOWN, THE ELECTRICAL CONTRACTOR SHALL PROVIDE ALL REQUIRED LOW VOLTAGE WIRING AND DATA CABLING, INCLUDING ALL 0-10V CONTROL WIRING WHERE APPLICABLE, PER THE MANUFACTURER'S RECOMMENDATIONS, FOR A COMPLETE, FUNCTIONAL LIGHTING CONTROL SYSTEM.

LUMINAIRE SCHEDULE

MARK	MANUFACTURER	CATALOG NUMBER	VOLTAGE	WATTS	MOUNTING	LAMP DESCRIPTION	LAMP TYPE	SELECTED BY OTHERS?	REMARKS
19047	JUNO	NXPCL-3G-BL	120	3 W	WALL, SURFACE	INTEGRAL	LED	YES	EMERGENCY / EXIT BUG-EYES
20686	DOLAN HOSPITALITY	627037 - FLOS IC S1	120	5 W	CEILING, SUSPENDED	G9 BASE	LED	YES	
21779	BRUCK	350440-13LM-30K-90-38-120-ELV-SNOOTBK-ECOBK	120	15 W	TRACK	INTEGRAL	LED	YES	PHASE DIMMING
21783EM	ORACLE LIGHTING	24-FPL1-LED-3500L-0-EMG-LED-20W	120	36 W	CEILING, RECESSED	INTEGRAL	LED	YES	
22217	LUMINII	LL91STP-MO-27K-SL-0706C-X-F-SA	24VDC	4W/FT	COVE	INTEGRAL	LED	YES	
X0601	ALPHABET	NU3-RA-SW-1155LM-S35-120-DIM10-BK	120	13 W	CEILING, RECESSED	INTEGRAL	LED	YES	CONFIRM ORDERING ATTRIBUTES WITH ARCHITECT.
X0601EM	ALPHABET	NU3-RA-SW-1155LM-S35-120-DIM10-BK-EM12	120	13 W	CEILING, RECESSED	INTEGRAL	LED	YES	90 MINUTE BATTERY BACKUP AT 12 WATTS

LUMINAIRE SCHEDULE GENERAL NOTES:

A. LUMINAIRE SYMBOLS THAT ARE LABELED "EM" ON THE PLAN(S) INDICATE LUMINAIRES THAT SERVE AS EMERGENCY LIGHTING. PROVIDE EMERGENCY ILLUMINATION FOR A MINIMUM OF 90 MINUTES.

B. ANY PROPOSED SUBSTITUTIONS FOR LUMINAIRES THAT ARE SELECTED BY OTHERS REQUIRE THE APPROVAL OF THE SPECIFYING ENTITY.

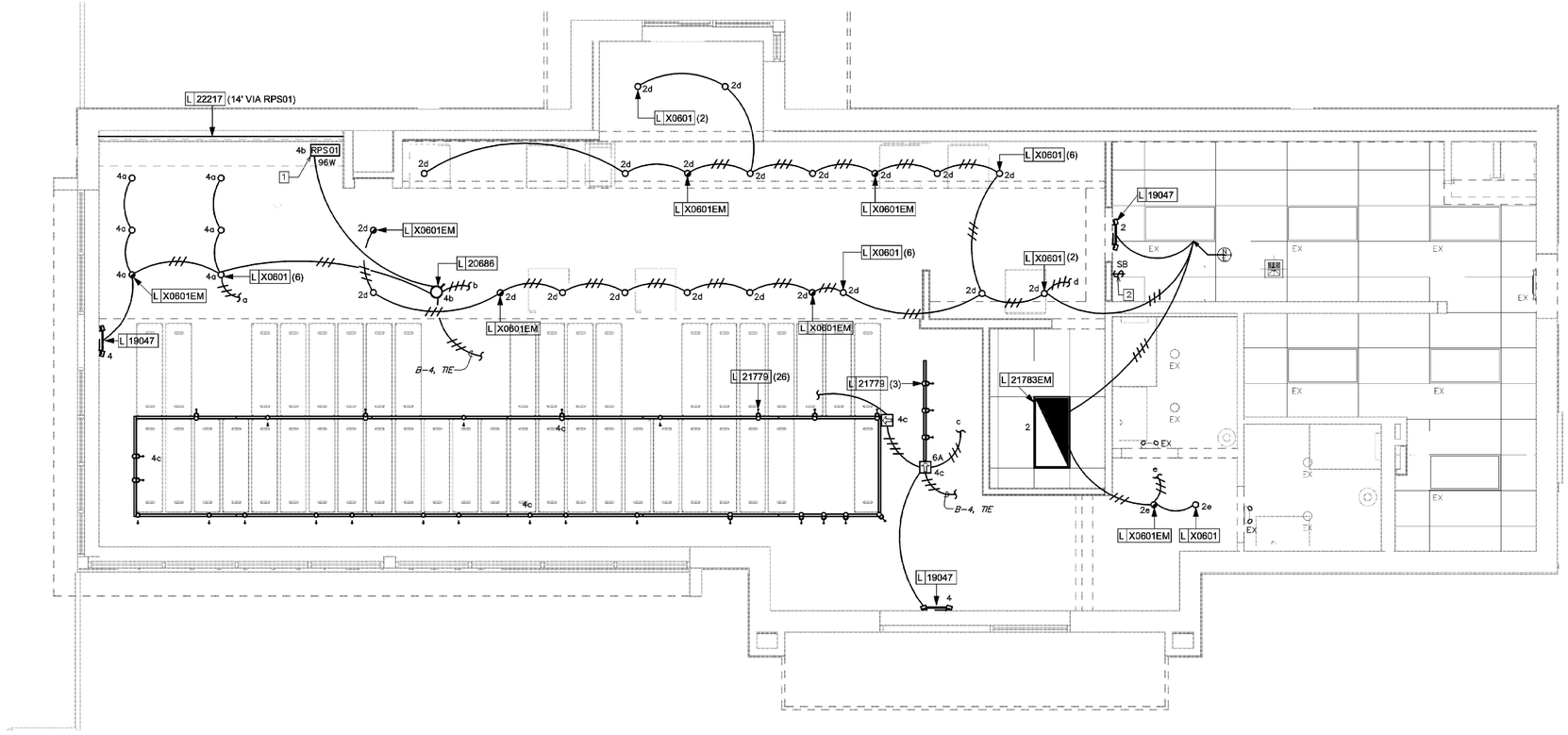

1 LIGHTING PLAN
Scale: 1/4" = 1'-0"

N

LEGEND
EXISTING
NEW WORK
NEW TO EXISTING CONNECTION

Schnackel engineers
River Walk Marina Chelsea Los Angeles Seattle Honolulu
800-581-0963 www.schnackel.com

PERMIT SET - FOR CONSTRUCTION USE

© 2022 STARBUCKS COFFEE COMPANY

STARBUCKS®
2401 UTAH AVENUE SOUTH
SEATTLE, WASHINGTON 98134
(206) 318-1575

THESE DRAWINGS AND THE PROJECT MANUAL ARE CONFIDENTIAL AND SHALL REMAIN THE SOLE PROPERTY OF STARBUCKS CORPORATION, WHICH IS THE OWNER OF THE COPYRIGHT IN THIS WORK. THEY SHALL NOT BE REPRODUCED (IN WHOLE OR IN PART), SHARED WITH THIRD PARTIES OR USED IN ANY MANNER ON OTHER PROJECTS OR EXTENSIONS TO THIS PROJECT WITHOUT THE PRIOR WRITTEN CONSENT OF STARBUCKS CORPORATION. THESE DRAWINGS AND SPECIFICATIONS ARE INTENDED TO EXPRESS DESIGN INTENT FOR A PROTOTYPICAL STARBUCKS STORE (WHICH IS SUBJECT TO CHANGE AT ANYTIME) AND DO NOT REFLECT ACTUAL SITE CONDITIONS. NEITHER PARTY SHALL HAVE ANY OBLIGATION NOR LIABILITY TO THE OTHER (EXCEPT STATED ABOVE) UNTIL A WRITTEN AGREEMENT IS FULLY EXECUTED BY BOTH PARTIES.

STARBUCKS TEMPLATE VERSION: i2023.08.28

GREGORY ROY SCHNACKEL LICENSE No PE 0048442 STATE OF FLORIDA PROFESSIONAL ENGINEER

Digitally signed by Gregory R Schnackel
Date: 2024.03.20 16:14:41-05'00'

Date: 03/20/24 COA#: 28403

Gensler
MAIN OFFICE
M. ARTHUR GENSLER JR. & ASSOCIATES
FL QUALIFIERS LIC. NO. AR96488
220 MONTGOMERY STREET, SUITE 200
SAN FRANCISCO, CA 94104 USA
Tel: (415) 433.3700
Fax: (415) 836.4599
SATELLITE OFFICE
M. ARTHUR GENSLER JR. & ASSOCIATES
545 NW 26TH ST
SUITE 250
MIAMI, FL 33127 USA
Tel: (305) 350.7079
Fax: (305) 350.7071

PROJECT NAME: NW 43RD & 53RD

PROJECT ADDRESS: 5480 NW 43RD STREET GAINESVILLE, FL 32653

STORE #: 10820
PROJECT #: 34769-081
ISSUE DATE: 03-15-2024
DESIGN MANAGER:
PRODUCTION DESIGNER: SEI
CHECKED BY: GRS

Revision Schedule

Rev	Date	By	Description

SHEET TITLE:
LIGHTING PLAN

SCALE: AS SHOWN

SHEET NUMBER:
E103

SE JOB#: 240185

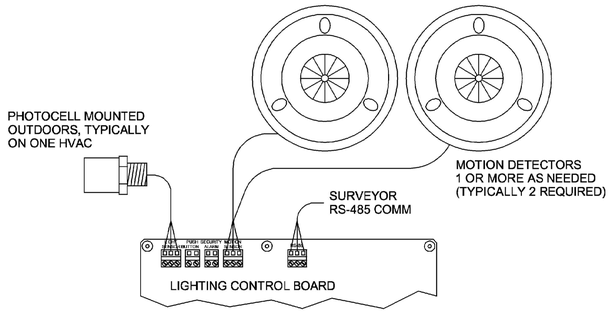

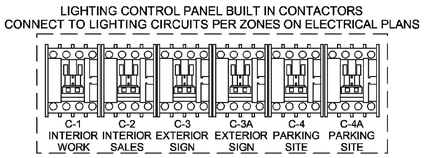

LIGHTING CONTROL

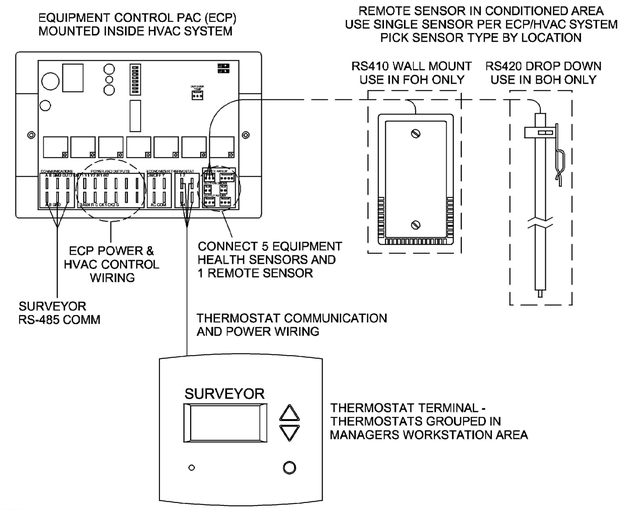

NOTES:

1. OUTDOOR TEMPERATURE SENSOR CONNECTED TO ONE ECP ONLY PER LOCATION. FACE NORTH WHEN POSSIBLE.
2. SEE GENERAL NOTES 7 AND 8 FOR REMOTE SENSOR MOUNTING LOCATION DETAILS.

HVAC CONTROLS

GENERAL NOTES

1. SURVEYOR ENERGY MANAGEMENT SYSTEM HARDWARE IS SUPPLIED BY STARBUCKS.
2. DRAWING FOR GENERAL INFORMATION, DESIGN INTENT, AND COORDINATION ONLY.
3. LOCAL BUILDING CODES TAKE PRECEDENCE OVER THIS DOCUMENT.
4. NOT ALL WIRING IS SHOWN ON THIS DRAWING. FOR CLARITY, ONLY ONE EXAMPLE OF EACH TYPE OF DEVICE IS SHOWN.
5. REFER TO THE SURVEYOR INSTALLATION INSTRUCTIONS FOR EACH COMPONENT FOR DETAILED WIRING AND ADDITIONAL CRITICAL INFORMATION.
6. CAUTION! INSTALLATION REQUIRES THE REMOVAL OF SAFETY COVERS AND EXPOSE THE INSTALLER TO HIGH VOLTAGE AND ELECTRICAL HAZARDS. USE OF A LICENSED ELECTRICIAN IS REQUIRED. FOLLOW ALL APPROPRIATE SAFETY PRECAUTIONS. ADDITIONAL SAFETY INFORMATION IS IN THE SURVEYOR INSTALLATION MANUALS.
7. USE WALL MOUNT REMOTE SENSOR IN FRONT OF HOUSE. MOUNT ON INSIDE WALL 4 TO 5 FT AFF. AVOID AREAS WITH DIRECT AIRFLOW FROM SUPPLY REGISTERS.
8. USE A DROP DOWN REMOTE SENSOR IN BACK OF HOUSE. THE SENSOR CLIPS TO THE T-BAR GRID AND ADJUSTED SO THE BOTTOM OF THE SENSOR IS 8 TO 9 FT AFF. ALLOW 2 FT OF CLEARANCE FROM METRO SHELVING AND AVOID AREAS WITH DIRECT AIRFLOW FROM SUPPLY REGISTERS.
9. FOR SURVEYOR EMS TECHNICAL SUPPORT AND SYSTEM COMMISSIONING, PLEASE CONTACT SURVEYOR TECHNICAL SUPPORT, (855) 647-7660, OPTION 1 OR EMAIL NCSSC.VENSTAR@SYLVANIA.COM. HOURS 6:00AM TO 8:00PM PACIFIC, MON-FRI.

SURVEYOR EMS COMPONENTS

VENSTAR PART	SBUX ITEM #	DESCRIPTION	QUANTITY
LCP401	011029483	LIGHTING CONTROL PANEL	1
DC400	011029485	DATA CONCENTRATOR	1
OTS400	011029487	OUTDOOR TEMPERATURE SENSOR	1
ECP400	011029489	EQUIPMENT CONTROL PAC	1 PER HVAC
CT414	011029490	COMMUNICATING THERMOSTAT	1 PER HVAC
SP400	011029491	SENSOR PAC	1 PER HVAC
RS410	011029492	WALL MOUNT REMOTE SENSOR	1 PER FOH HVAC
RS420	011050767	NARROW DROP DOWN SENSOR	1 PER BOH HVAC
MD400	011029497	ADDITIONAL MOTION DETECTOR	AS NEEDED

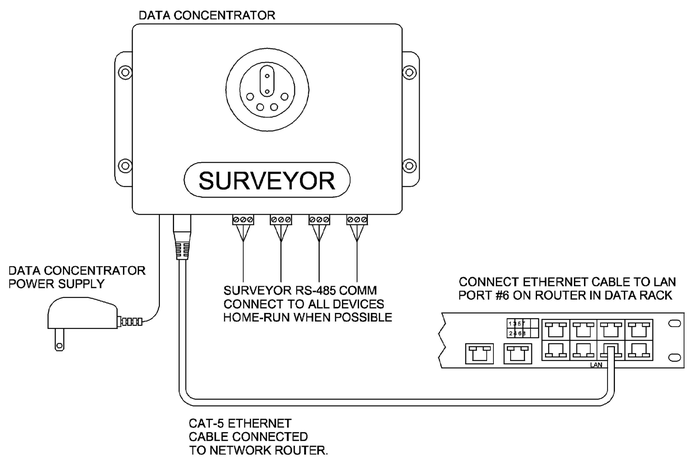

DATA CONCENTRATOR

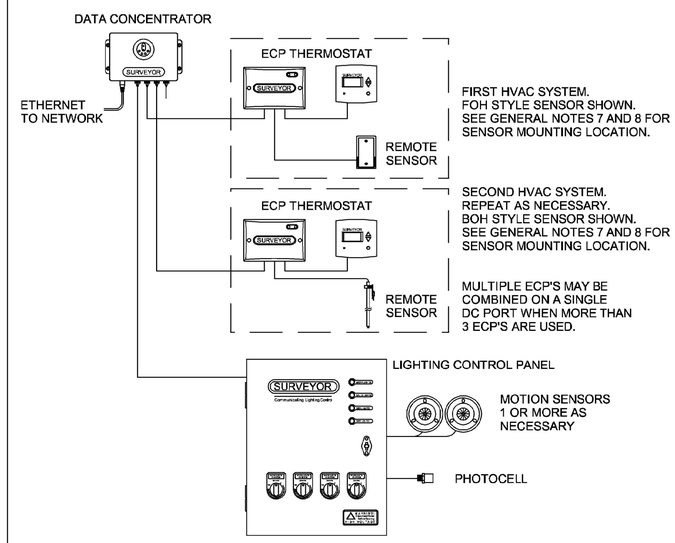

BASIC LOW VOLTAGE WIRE RUNS

B MINOR CLARIFICATIONS	CG 2/27/15				
A INITIAL DRAWING RELEASE	CG 2/11/15				

VENSTAR INC.

TITLE: SURVEYOR

STARBUCKS FULL LIGHTING AND HVAC CONTROLS

SIZE	DATE	DWG NO	REV
D	1-29-15	S15-001	B

SCALE: NONE | DRAWN: C. GODWIN | SHEET: 1 OF 1

Schnackel engineers
New Tribal Mexico Oriente Los Angeles Austin Nevada
800-381-0963 www.schnackel.com

PERMIT SET - FOR CONSTRUCTION USE

© 2022 STARBUCKS COFFEE COMPANY

STARBUCKS®
2401 UTAH AVENUE SOUTH
SEATTLE, WASHINGTON 98134
(206) 318-1575

THESE DRAWINGS AND THE PROJECT MANUAL ARE CONFIDENTIAL AND SHALL REMAIN THE SOLE PROPERTY OF STARBUCKS CORPORATION, WHICH IS THE OWNER OF THE COPYRIGHT IN THIS WORK. THEY SHALL NOT BE REPRODUCED (IN WHOLE OR IN PART), SHARED WITH THIRD PARTIES OR USED IN ANY MANNER ON OTHER PROJECTS OR EXTENSIONS TO THIS PROJECT WITHOUT THE PRIOR WRITTEN CONSENT OF STARBUCKS CORPORATION. THESE DRAWINGS AND SPECIFICATIONS ARE INTENDED TO EXPRESS DESIGN INTENT FOR A PROTOTYPICAL STARBUCKS STORE (WHICH IS SUBJECT TO CHANGE AT ANYTIME) AND DO NOT REFLECT ACTUAL SITE CONDITIONS. NEITHER PARTY SHALL HAVE ANY OBLIGATION NOR LIABILITY TO THE OTHER (EXCEPT STATED ABOVE) UNTIL A WRITTEN AGREEMENT IS FULLY EXECUTED BY BOTH PARTIES.

STARBUCKS TEMPLATE VERSION: i2023.08.28

GREGORY ROY SCHNACKEL LICENSE No PE 0048442 STATE OF FLORIDA PROFESSIONAL ENGINEER

Digitally signed by Gregory R Schnackel
Date: 2024.03.20 16:14:50-05'00'

Date: 03/20/24 COA#: 28403

Gensler
MAIN OFFICE
M. ARTHUR GENSLER JR. & ASSOCIATES
FL QUALIFIER'S LIC. NO. AR26486
220 MONTGOMERY STREET, SUITE 200
SAN FRANCISCO, CA 94104 USA
Tel: (415) 433.3700
Fax: (415) 836.4599
SATELLITE OFFICE
M. ARTHUR GENSLER JR. & ASSOCIATES
545 NW 26TH ST
SUITE 250
MIAMI, FL 33127 USA
Tel: (305) 350.7070
Fax: (305) 590.7071

PROJECT NAME: NW 43RD & 53RD

PROJECT ADDRESS: 5480 NW 43RD STREET GAINESVILLE, FL 32653

STORE #: 10820
PROJECT #: 34769-081
ISSUE DATE: 03-15-2024
DESIGN MANAGER:
PRODUCTION DESIGNER: SEI
CHECKED BY: GRS

Revision Schedule

Rev	Date	By	Description

SHEET TITLE: VENSTAR CONTROL DIAGRAMS
SCALE: AS SHOWN

SHEET NUMBER: E104

SE_IOSM: 240195

ELECTRICAL GENERAL NOTES

A. ELECTRICAL CONTRACTOR - COORDINATE WITH PLUMBING AND LOW VOLTAGE TRADES FOR SPACE LAYOUT. ASSURE SPACE FOR WALL MOUNTED EQUIPMENT, PLUMBING AND DATA BOXES ARE WELL PLANNED FOR INSTALL.

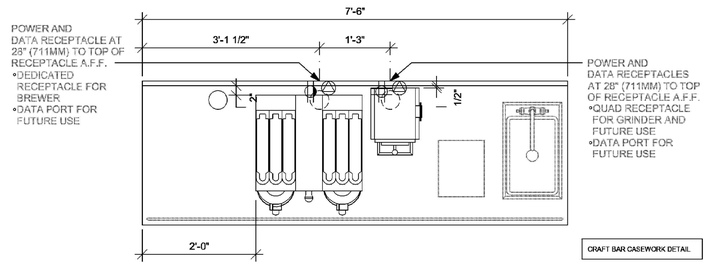

4 BRW 09-01
Scale: 3/4" = 1'-0"

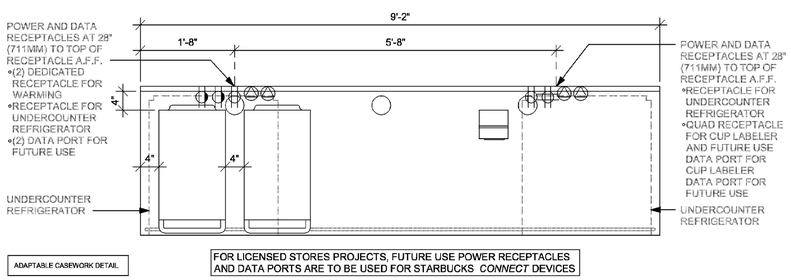

3 WRM 16-02
Scale: 3/4" = 1'-0"

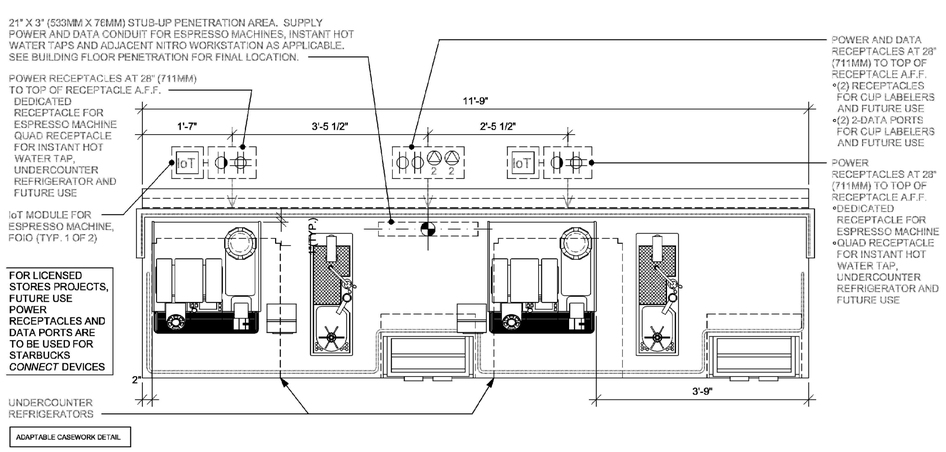

2 ESP 04-02
Scale: 3/4" = 1'-0"

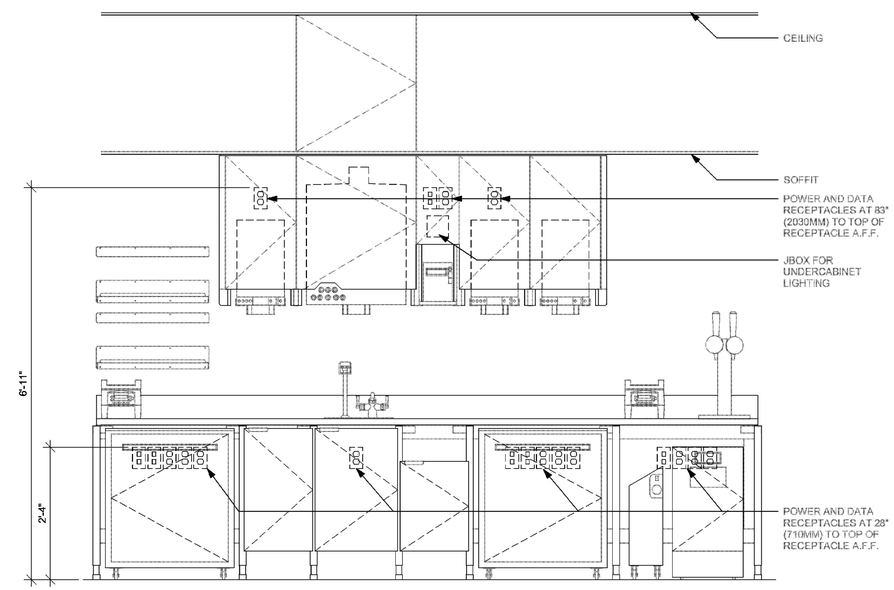

ELEVATION - ELECTRICAL DIAGRAM

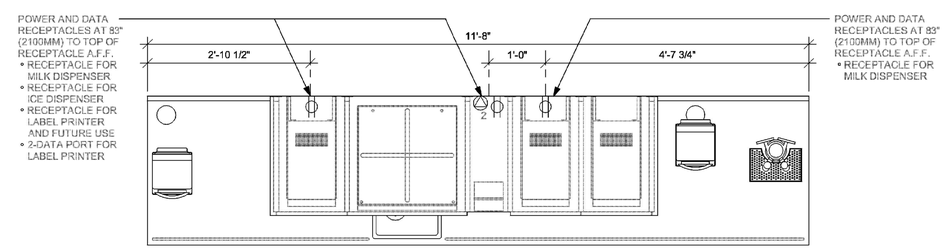

PLAN - UPPER ELECTRICAL DIAGRAM

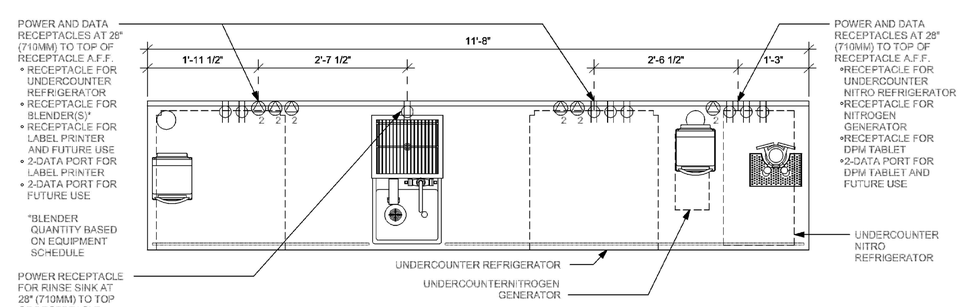

PLAN - ELECTRICAL DIAGRAM

1 CBE 16-01
Scale: 3/4" = 1'-0"

SE JOB#: 2401185

Schnackel engineers
River Walk Marina Chatham St. Angeles & Seattle Washington
800-581-0963 www.schnackel.com

PERMIT SET - FOR CONSTRUCTION USE

© 2022 STARBUCKS COFFEE COMPANY

STARBUCKS®
2401 UTAH AVENUE SOUTH
SEATTLE, WASHINGTON 98134
(206) 318-1575

THESE DRAWINGS AND THE PROJECT MANUAL ARE CONFIDENTIAL AND SHALL REMAIN THE SOLE PROPERTY OF STARBUCKS CORPORATION, WHICH IS THE OWNER OF THE COPYRIGHT IN THIS WORK. THEY SHALL NOT BE REPRODUCED (IN WHOLE OR IN PART), SHARED WITH THIRD PARTIES OR USED IN ANY MANNER ON OTHER PROJECTS OR EXTENSIONS TO THIS PROJECT WITHOUT THE PRIOR WRITTEN CONSENT OF STARBUCKS CORPORATION. THESE DRAWINGS AND SPECIFICATIONS ARE INTENDED TO EXPRESS DESIGN INTENT FOR A PROTOTYPICAL STARBUCKS STORE (WHICH IS SUBJECT TO CHANGE AT ANYTIME) AND DO NOT REFLECT ACTUAL SITE CONDITIONS. NEITHER PARTY SHALL HAVE ANY OBLIGATION NOR LIABILITY TO THE OTHER (EXCEPT STATED ABOVE) UNTIL A WRITTEN AGREEMENT IS FULLY EXECUTED BY BOTH PARTIES.

STARBUCKS TEMPLATE VERSION: i2023.08.28

GREGORY ROY SCHNACKEL LICENSE No PE 0048442 STATE OF FLORIDA PROFESSIONAL ENGINEER

Digitally signed by Gregory R Schnackel
Date: 2024.03.20 16:14:57-05'00'

Date: 03/20/24 COA#: 28403

Gensler
MAIN OFFICE
M. ARTHUR GENSLER JR. & ASSOCIATES
FL QUALIFIERS LIC. NO. AR96488
220 MONTGOMERY STREET, SUITE 200
SAN FRANCISCO, CA 94104 USA
Tel: (415) 433.3700
Fax: (415) 836.4599
SATELLITE OFFICE
M. ARTHUR GENSLER JR. & ASSOCIATES
545 NW 26TH ST
SUITE 250
MIAMI, FL 33127 USA
Tel: (305) 350.7079
Fax: (305) 350.7071

PROJECT NAME: NW 43RD & 53RD

PROJECT ADDRESS: 5480 NW 43RD STREET GAINESVILLE, FL 32653

STORE #:	10820
PROJECT #:	34769-081
ISSUE DATE:	03-15-2024
DESIGN MANAGER:	
PRODUCTION DESIGNER:	SEI
CHECKED BY:	GRS

Revision Schedule

Rev	Date	By	Description

SHEET TITLE:
ELECTRICAL DETAILS

SCALE: AS SHOWN

SHEET NUMBER:
E501

ELECTRICAL GENERAL NOTES

A. ELECTRICAL CONTRACTOR - COORDINATE WITH PLUMBING AND LOW VOLTAGE TRADES FOR SPACE LAYOUT. ASSURE SPACE FOR WALL MOUNTED EQUIPMENT, PLUMBING AND DATA BOXES ARE WELL PLANNED FOR INSTALL.

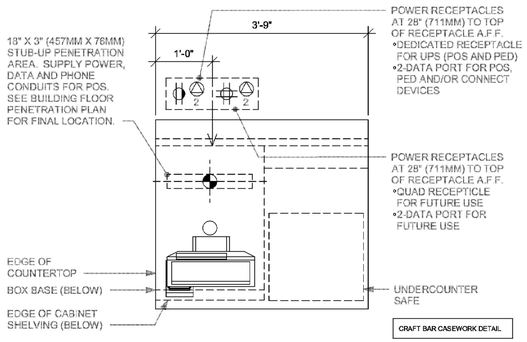

3 POS 04-02
Scale: 3/4" = 1'-0"

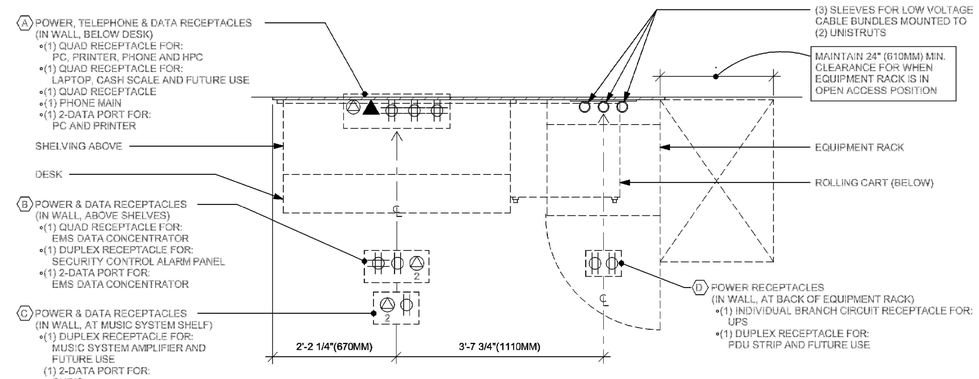

PLAN VIEW

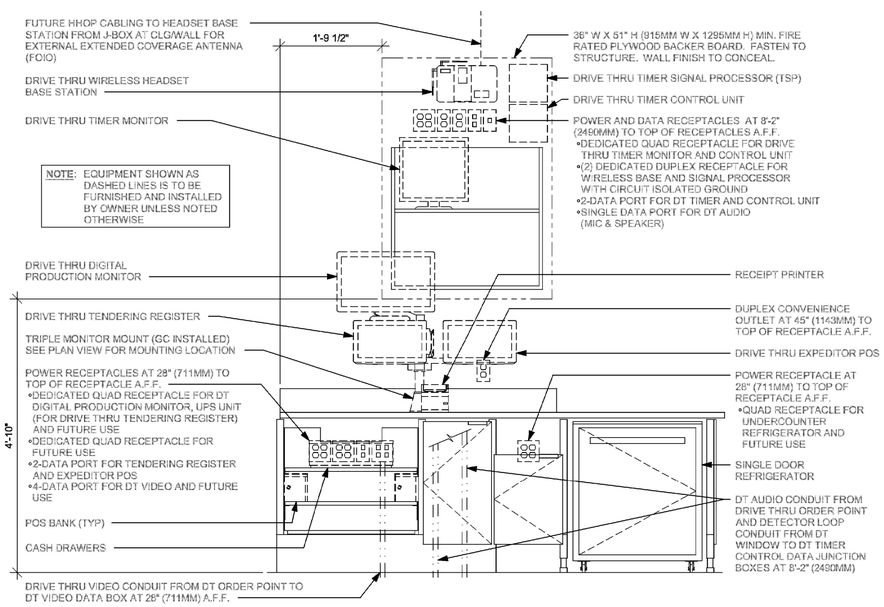

ELEVATION VIEW

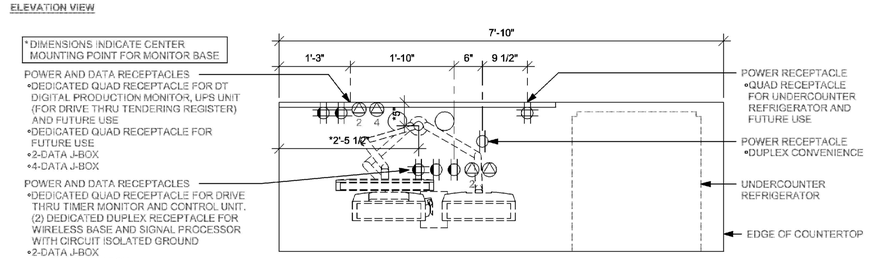

PLAN VIEW

FOR LICENSED STORES PROJECTS, FUTURE USE POWER RECEPTACLES AND DATA PORTS ARE TO BE USED FOR STARBUCKS *CONNECT* DEVICES

ADAPTABLE CASEWORK DETAIL

2 POS 08-03
Scale: 3/4" = 1'-0"

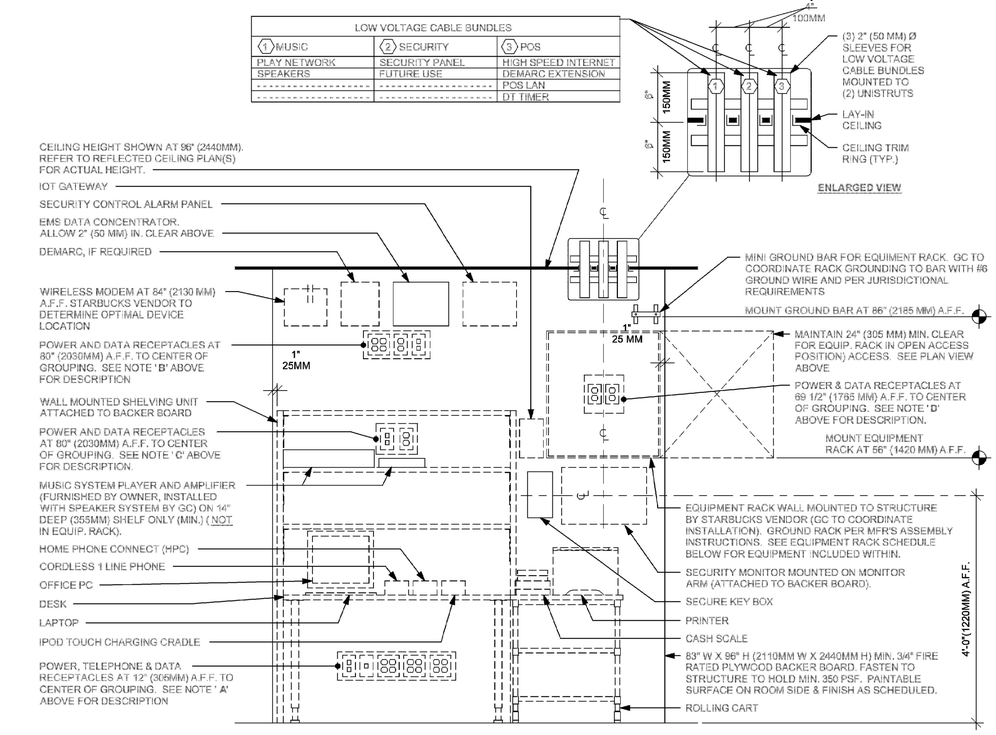

ELEVATION VIEW

NOTE: EQUIPMENT SHOWN AS DASHED LINES IS TO BE FURNISHED AND INSTALLED BY OWNER UNLESS NOTED OTHERWISE.

EQUIPMENT RACK SCHEDULE		
UPS	NETWORK SWITCH	SECURITY RECORDER (NVR)
IPS EQUIPMENT	PATCH PANEL	SECURITY KEYBOARD
ROUTER	PRODUCTION CONTROLLER DEVICES	

1 MANAGER DESK (NEW) AND EQUIPMENT RACK - RIGHT
Scale: 3/4" = 1'-0"

Schnackel engineers
New Orleans Metairie Gretna Los Angeles Seattle Honolulu
800-581-0963 www.schnackel.com

SE JOB#: 240195

PERMIT SET - FOR CONSTRUCTION USE

© 2022 STARBUCKS COFFEE COMPANY

STARBUCKS®
2401 UTAH AVENUE SOUTH
SEATTLE, WASHINGTON 98134
(206) 318-1575

THESE DRAWINGS AND THE PROJECT MANUAL ARE CONFIDENTIAL AND SHALL REMAIN THE SOLE PROPERTY OF STARBUCKS CORPORATION, WHICH IS THE OWNER OF THE COPYRIGHT IN THIS WORK. THEY SHALL NOT BE REPRODUCED (IN WHOLE OR IN PART), SHARED WITH THIRD PARTIES OR USED IN ANY MANNER ON OTHER PROJECTS OR EXTENSIONS TO THIS PROJECT WITHOUT THE PRIOR WRITTEN CONSENT OF STARBUCKS CORPORATION. THESE DRAWINGS AND SPECIFICATIONS ARE INTENDED TO EXPRESS DESIGN INTENT FOR A PROTOTYPICAL STARBUCKS STORE (WHICH IS SUBJECT TO CHANGE AT ANYTIME) AND DO NOT REFLECT ACTUAL SITE CONDITIONS. NEITHER PARTY SHALL HAVE ANY OBLIGATION NOR LIABILITY TO THE OTHER (EXCEPT STATED ABOVE) UNTIL A WRITTEN AGREEMENT IS FULLY EXECUTED BY BOTH PARTIES.

STARBUCKS TEMPLATE VERSION: i2023.08.28

GREGORY ROY SCHNACKEL LICENSE No PE 0048442 STATE OF FLORIDA PROFESSIONAL ENGINEER

Digitally signed by Gregory R Schnackel
Date: 2024.03.20 16:15:03-05'00'

Date: 03/20/24 COA# 28403

Gensler
MAIN OFFICE
M. ARTHUR GENSLER JR. & ASSOCIATES
FL QUALIFIERS LIC. NO. AR96488
220 MONTGOMERY STREET, SUITE 200
SAN FRANCISCO, CA 94104 USA
Tel (415) 433.3700
Fax (415) 836.4599
SATELLITE OFFICE
M. ARTHUR GENSLER JR. & ASSOCIATES
540 NW 26TH ST
SUITE 250
MIAMI, FL 33127 USA
Tel (305) 350.7079
Fax (305) 350.7071

PROJECT NAME: NW 43RD & 53RD

PROJECT ADDRESS: 5480 NW 43RD STREET GAINESVILLE, FL 32653

STORE #:	10820
PROJECT #:	34769-081
ISSUE DATE:	03-15-2024
DESIGN MANAGER:	
PRODUCTION DESIGNER:	SEI
CHECKED BY:	GRS

Revision Schedule

Rev	Date	By	Description

SHEET TITLE:
ELECTRICAL DETAILS

SCALE: AS SHOWN

SHEET NUMBER:
E502

ELECTRICAL GENERAL NOTES

A. ELECTRICAL CONTRACTOR - COORDINATE WITH PLUMBING AND LOW VOLTAGE TRADES FOR SPACE LAYOUT. ASSURE SPACE FOR WALL MOUNTED EQUIPMENT, PLUMBING AND DATA BOXES ARE WELL PLANNED FOR INSTALL.

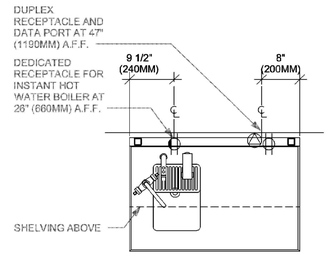

4 WATER FILLING STATION
Scale: 3/4" = 1'-0"

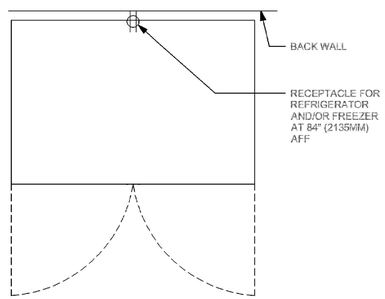

3 REFRIGERATOR/FREEZER
Scale: 3/4" = 1'-0"

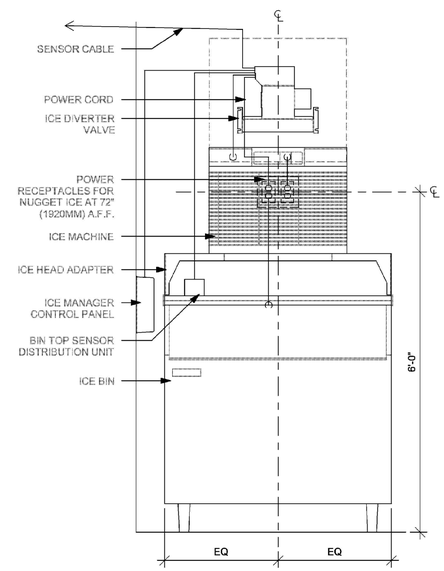

ELEVATION - ELECTRICAL DIAGRAM

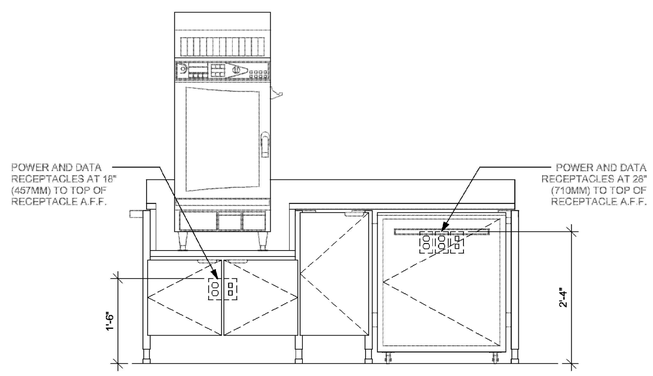

ELEVATION - ELECTRICAL DIAGRAM

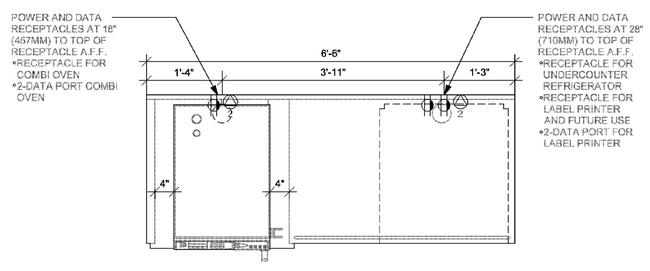

ELEVATION - ELECTRICAL DIAGRAM

ADAPTABLE CASEWORK DETAIL

2 WRM 19-01
Scale: 3/4" = 1'-0"

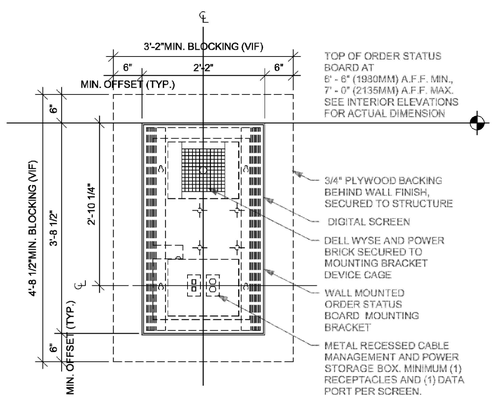

5 ORDER STATUS BOARD
Scale: 3/4" = 1'-0"

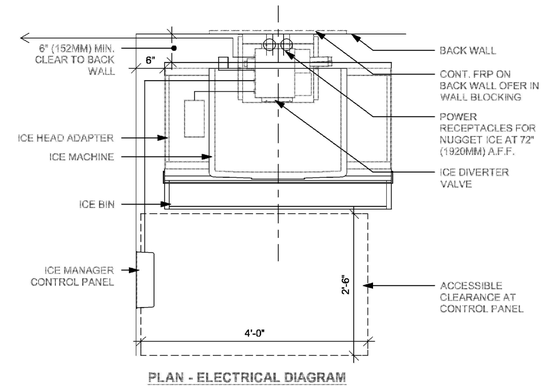

PLAN - ELECTRICAL DIAGRAM

1 NUGGET ICE PEDESTAL - STACK
Scale: 3/4" = 1'-0"

Schnackel engineers
New Yorkers Mexico Cincinnati Los Angeles Austin Nevada
800-381-0963 www.schnackel.com

SE: IOSM: 240195

PERMIT SET - FOR CONSTRUCTION USE

© 2022 STARBUCKS COFFEE COMPANY

STARBUCKS®
2401 UTAH AVENUE SOUTH
SEATTLE, WASHINGTON 98134
(206) 318-1575

THESE DRAWINGS AND THE PROJECT MANUAL ARE CONFIDENTIAL AND SHALL REMAIN THE SOLE PROPERTY OF STARBUCKS CORPORATION, WHICH IS THE OWNER OF THE COPYRIGHT IN THIS WORK. THEY SHALL NOT BE REPRODUCED (IN WHOLE OR IN PART), SHARED WITH THIRD PARTIES OR USED IN ANY MANNER ON OTHER PROJECTS OR EXTENSIONS TO THIS PROJECT WITHOUT THE PRIOR WRITTEN CONSENT OF STARBUCKS CORPORATION. THESE DRAWINGS AND SPECIFICATIONS ARE INTENDED TO EXPRESS DESIGN INTENT FOR A PROTOTYPICAL STARBUCKS STORE (WHICH IS SUBJECT TO CHANGE AT ANYTIME) AND DO NOT REFLECT ACTUAL SITE CONDITIONS. NEITHER PARTY SHALL HAVE ANY OBLIGATION NOR LIABILITY TO THE OTHER (EXCEPT STATED ABOVE) UNTIL A WRITTEN AGREEMENT IS FULLY EXECUTED BY BOTH PARTIES.

STARBUCKS TEMPLATE VERSION: i2023.08.28

GREGORY ROY SCHNACKEL LICENSE No PE 0048442 STATE OF FLORIDA PROFESSIONAL ENGINEER

Digitally signed by Gregory R Schnackel
Date: 2024.03.20 16:15:11-05'00'

Date: 03/20/24 COA#: 28403

Gensler
MAIN OFFICE
M. ARTHUR GENSLER JR. & ASSOCIATES
FL QUALIFIERS LIC. NO. AA26468
220 MONTGOMERY STREET, SUITE 200
SAN FRANCISCO, CA 94104 USA
Tel: (415) 433.3700
Fax: (415) 836.4599
SATELLITE OFFICE
M. ARTHUR GENSLER JR. & ASSOCIATES
545 NW 26TH ST
SUITE 250
MIAMI, FL 33127 USA
Tel: (305) 350.7070
Fax: (305) 350.7071

PROJECT NAME: NW 43RD & 53RD

PROJECT ADDRESS: 5480 NW 43RD STREET GAINESVILLE, FL 32653

STORE #:	10820
PROJECT #:	34769-081
ISSUE DATE:	03-15-2024
DESIGN MANAGER:	
PRODUCTION DESIGNER:	SEI
CHECKED BY:	GRS

Revision Schedule

Rev	Date	By	Description

SHEET TITLE:
ELECTRICAL DETAILS

SCALE: AS SHOWN

SHEET NUMBER:
E503

LOAD ANALYSIS FOR PANEL "MDP" (INCLUDING SUBFEEDS)

LOAD DESCRIPTION	DEMAND FACTOR	PHASE A (VA) CONNECT.	PHASE A (VA) DEMAND	PHASE B (VA) CONNECT.	PHASE B (VA) DEMAND	PHASE C (VA) CONNECT.	PHASE C (VA) DEMAND	TOTAL (VA) CONNECT.	TOTAL (VA) DEMAND
LIGHTING:	125%	2500	3125	700	875	100	125	3300	4125
RECEPTACLE:	100%	2340	2340	3720	3720	3060	3060	9120	9120
OTHER CONTINUOUS:	125%	0	0	560	700	0	0	560	700
OTHER NONCONTINUOUS:	100%	1680	1680	2300	2300	900	900	4880	4880
WATER HEATING:	100%	3000	3000	3000	3000	3000	3000	9000	9000
KITCHEN:	65%	27259	17719	27046	17580	26006	16904	80311	52202
MOTOR:	100%	11212	11212	9152	9152	11672	11672	32036	32036
ADD 25% OF LARGEST MOTOR:	100%	468	468	468	468	468	468	1404	1404
TOTAL:		48459	39544	46946	37795	45206	36129	140611	113467
EQUIVALENT AMPS:		404	330	392	315	377	302	391	315
PHASE BALANCE:			4.55%		−0.07%		−4.48%		

EXISTING PANEL "A"

FED FROM: PANEL "MDP"
VOLTAGE: 208Y/120V, 3 PHASE, 4 WIRE
BUS MATERIAL: EXISTING
BUS LOAD: 129 AMPS
BUS RATING: 200 AMPS
MAIN: MAIN LUG ONLY

MOUNTING: FLUSH MOUNTED
ENCLOSURE: NEMA 1
FAULT CURRENT: EXISTING
AIC/SCCR RATING: MATCH EXISTING
OPTIONS*: BONDED EQUIPMENT GROUND BAR

NOTES	CKT.	LOAD DESCRIPTION	LOAD (VA) A	LOAD (VA) B	LOAD (VA) C	BREAKER	BREAKER	LOAD (VA) A	LOAD (VA) B	LOAD (VA) C	LOAD DESCRIPTION	CKT.	NOTES
GFCI	1	ESPRESSO	3000			40/2	20/1	1920			NITRO GEN / DISPENSE	2	GFCI
	3	-----		3000		---	20/1		360		MENU / ORDER BOARDS	4	GFCI
GFCI	5	ESPRESSO			3000	40/2	20/1			1800	MILK / ICE DISPENSER	6	GFCI
	7	-----	3000			---	20/1	1200			FUTURE FRIGE / FREEZER	8	GFCI
	9	FOOD CASE		707		20/2	20/1		1460		UC FRIGE	10	GFCI
	11	-----			707	---	20/1			1500	BLENDER	12	GFCI
	13	SANITIZER	3000			40/2	20/1	1500			BLENDER	14	GFCI
	15	-----		3000		---	20/1		1500		INSTAHOT	16	GFCI
	17	RESTROOM RECEPTS.			360	20/1	20/1			1280	UC FRIGE	18	GFCI
HPL	19	HAND DRYER	1500			20/1	20/1	460			UC FRIGE	20	GFCI
HPL	21	HAND DRYER		1500		20/1	20/1		1500		INSTAHOT	22	GFCI
	23	ASHP-1			1560	25/2	20/1			1800	SEATING RECEPTS.	24	
	25	------	1560			---	20/1	400			EXTERIOR LIGHTS	26	
	27	MUSIC / DATA CONCENTR.		720		20/1	20/1		350		WATER FILTER	28	
	29	UPS / DATA RACK			360	20/1	20/1			1200	REACH-IN FRIGE	30	GFCI
	31	MANAGER'S DESK	1080			20/1	20/1	1200			REACH-IN FRIGE	32	GFCI
GFCI	33	SAFE		180		20/1	20/1		1200		REACH-IN FREEZER	34	GFCI
GFCI	35	POS			180	20/1	20/1			1200	REACH-IN FREEZER	36	GFCI
	37	PATIO RECEP	180			20/1	20/1	360			COMMUNITY TABLE	38	
GFCI	39	SPARE				20/1	20/1		200		DT MENU BOARD	40	
GFCI	41	SPARE				20/1	15/1			780	ICE MACH. EVAP / DIVERT.	42	GFCI

NOTES:
* SEE SPECIFICATIONS FOR OTHER OPTIONS REQUIRED BUT NOT NECESSARILY NOTED HERE
GFCI PROVIDE GROUND-FAULT CIRCUIT-INTERRUPTER (GFCI) 5 MILLIAMP TRIP TYPE CIRCUIT BREAKER.
HPL PROVIDE PERMANENTLY-INSTALLED HANDLE PADLOCK ACCESSORY TO LOCK CIRCUIT BREAKER IN THE OPEN POSITION.

LOAD ANALYSIS FOR PANEL "A" (INCLUDING SUBFEEDS)

LOAD DESCRIPTION	DEMAND FACTOR	PHASE A (VA) CONNECT.	PHASE A (VA) DEMAND	PHASE B (VA) CONNECT.	PHASE B (VA) DEMAND	PHASE C (VA) CONNECT.	PHASE C (VA) DEMAND	TOTAL (VA) CONNECT.	TOTAL (VA) DEMAND
LIGHTING:	125%	400	500	0	0	0	0	400	500
RECEPTACLE:	100%	1620	1620	2720	2720	2700	2700	7040	7040
OTHER CONTINUOUS:	125%	0	0	560	700	0	0	560	700
OTHER NONCONTINUOUS:	100%	1500	1500	1500	1500	0	0	3000	3000
KITCHEN:	65%	15280	9932	10908	7090	11468	7454	37655	24476
MOTOR:	100%	1560	1560	0	0	1560	1560	3120	3120
ADD 25% OF LARGEST MOTOR:	100%	260	260	260	260	260	260	780	780
TOTAL:		20620	15372	15948	12270	15988	11974	52555	39616
EQUIVALENT AMPS:		172	129	133	103	134	100	146	110
PHASE BALANCE:			16.41%		−7.08%		−9.33%		

EXISTING PANEL "B"

FED FROM: PANEL "MDP"
VOLTAGE: 208Y/120V, 3 PHASE, 4 WIRE
BUS MATERIAL: EXISTING
BUS LOAD: 111 AMPS
BUS RATING: 200 AMPS
MAIN: MAIN LUG ONLY

MOUNTING: FLUSH MOUNTED
ENCLOSURE: NEMA 1
FAULT CURRENT: EXISTING
AIC/SCCR RATING: MATCH EXISTING
OPTIONS*: BONDED EQUIPMENT GROUND BAR

NOTES	CKT.	LOAD DESCRIPTION	LOAD (VA) A	LOAD (VA) B	LOAD (VA) C	BREAKER	BREAKER	LOAD (VA) A	LOAD (VA) B	LOAD (VA) C	LOAD DESCRIPTION	CKT.	NOTES
	1	OVEN	3000			30/2	20/1	500			WORK LIGHTS	2	
	3	-----		3000		---	20/1		500		CAFÉ LIGHTS	4	
	5	OVEN			3000	30/2	30/3			2879	COMBI-OVEN	6	GFCI
	7	-----	3000			---	---	2879			-----	8	
	9	BREWER		4160		50/2	---		2879		-----	10	
	11	-----			4160	---	20/1				SPARE	12	
	13	ICE MACHINE	3100			45/2	20/1	1200			LOGO SIGN	14	
	15	-----		3100		---	20/1		200		DT SIGNS	16	
GFCI	17	SPARE				20/1	20/1			100	WORDMARK SIGN	18	
GFCI	19	SPARE				20/1	20/1	400			EXTERIOR LIGHTS	20	
GFCI	21	SPARE				20/1	20/2		800		REMOTE CONDENSER	22	
GFCI	23	GRINDER			1500	20/1	---			800	-----	24	
GFCI	25	SERVER STAND	180			20/1	20/1	180			IRRIGATION	26	
GFCI	27	UC FRIGE / COUNTER		640		20/1	20/1				SPARE	28	
	29	SPARE				20/1	20/1			960	BOOSTER PUMP	30	
	31	SPARE				20/1	20/1	500			PUMP	32	
	33	SPARE				20/1	20/1				SPARE	34	
	35	SPARE				20/1	20/1			100	LCP	36	
GFCI	37	DT UC FRIGE / COUNTER	360			20/1	20/1	360			IT RACK	38	
GFCI	39	DT POS / EXPEDITOR		360		20/1	30/2		3000		WARMING WALL	40	GFCI
GFCI	41	DT COMMS			360	20/1	---			3000	-----	42	

NOTES:
* SEE SPECIFICATIONS FOR OTHER OPTIONS REQUIRED BUT NOT NECESSARILY NOTED HERE
GFCI PROVIDE GROUND-FAULT CIRCUIT-INTERRUPTER (GFCI) 5 MILLIAMP TRIP TYPE CIRCUIT BREAKER.

LOAD ANALYSIS FOR PANEL "B" (INCLUDING SUBFEEDS)

LOAD DESCRIPTION	DEMAND FACTOR	PHASE A (VA) CONNECT.	PHASE A (VA) DEMAND	PHASE B (VA) CONNECT.	PHASE B (VA) DEMAND	PHASE C (VA) CONNECT.	PHASE C (VA) DEMAND	TOTAL (VA) CONNECT.	TOTAL (VA) DEMAND
LIGHTING:	125%	2100	2625	700	875	100	125	2900	3625
RECEPTACLE:	100%	900	900	1000	1000	360	360	2260	2260
OTHER NONCONTINUOUS:	100%	180	180	800	800	900	900	1880	1880
KITCHEN:	65%	11979	7787	16139	10491	14539	9451	42657	27727
MOTOR:	100%	500	500	0	0	960	960	1460	1460
ADD 25% OF LARGEST MOTOR:	100%	80	80	80	80	80	80	240	240
TOTAL:		15739	12072	18719	13246	16939	11876	51397	37192
EQUIVALENT AMPS:		132	101	156	111	142	99	143	104
PHASE BALANCE:			−2.63%		6.84%		−4.21%		

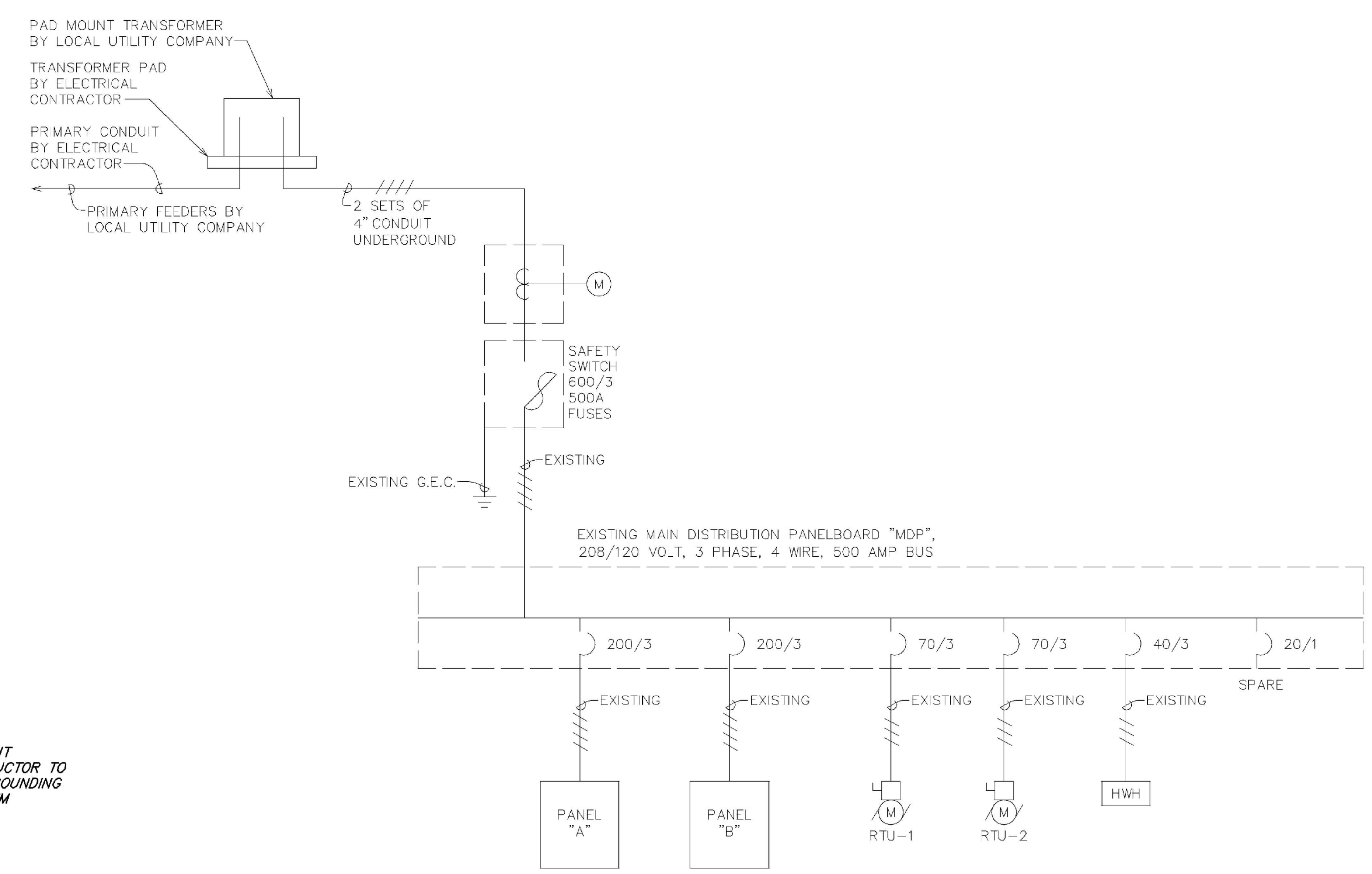

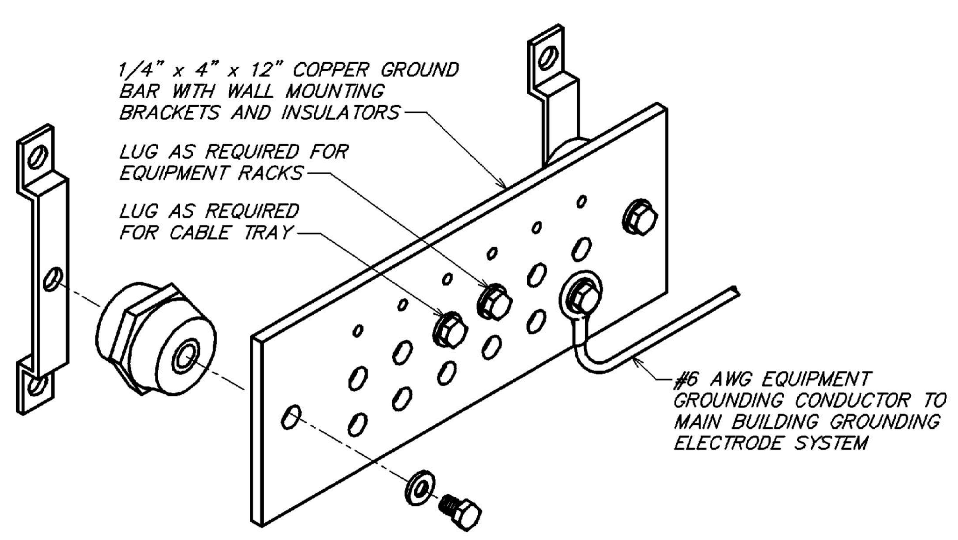

GENERAL NOTES APPLICABLE TO THIS DETAIL:
A. NOT ALL PARTS AND PART NUMBERS ARE SHOWN IN THE DETAIL. THE ELECTRICAL CONTRACTOR IS RESPONSIBLE FOR A COMPLETE WORKING INSTALLATION, INCLUDING MISCELLANEOUS APPURTENANCES REQUIRED BUT NOT SHOWN.

2 GROUND BAR DETAIL
NOT TO SCALE

1 ONE-LINE DIAGRAM - FOR REFERENCE ONLY
NOT TO SCALE

LEGEND
EXISTING
NEW WORK
NEW TO EXISTING CONNECTION

SE JOB#: 240195

Schnackel engineers
New York ▪ Miami ▪ Omaha ▪ Los Angeles ▪ Seattle ▪ Honolulu
800-581-0963 www.schnackel.com

PERMIT SET - FOR CONSTRUCTION USE

© 2022 STARBUCKS COFFEE COMPANY

STARBUCKS®
2401 UTAH AVENUE SOUTH
SEATTLE, WASHINGTON 98134
(206) 318-1575

THESE DRAWINGS AND THE PROJECT MANUAL ARE CONFIDENTIAL AND SHALL REMAIN THE SOLE PROPERTY OF STARBUCKS CORPORATION, WHICH IS THE OWNER OF THE COPYRIGHT IN THIS WORK. THEY SHALL NOT BE REPRODUCED (IN WHOLE OR IN PART), SHARED WITH THIRD PARTIES OR USED IN ANY MANNER ON OTHER PROJECTS OR EXTENSIONS TO THIS PROJECT WITHOUT THE PRIOR WRITTEN CONSENT OF STARBUCKS CORPORATION. THESE DRAWINGS AND SPECIFICATIONS ARE INTENDED TO EXPRESS DESIGN INTENT FOR A PROTOTYPICAL STARBUCKS STORE (WHICH IS SUBJECT TO CHANGE AT ANYTIME) AND DO NOT REFLECT ACTUAL SITE CONDITIONS. NEITHER PARTY SHALL HAVE ANY OBLIGATION NOR LIABILITY TO THE OTHER (EXCEPT STATED ABOVE) UNTIL A WRITTEN AGREEMENT IS FULLY EXECUTED BY BOTH PARTIES.

STARBUCKS TEMPLATE VERSION: i2023.08.28

GREGORY ROY SCHNACKEL LICENSE No PE 0048442 STATE OF FLORIDA PROFESSIONAL ENGINEER
Digitally signed by Gregory R Schnackel
Date: 2024.03.20 16:15:16-05'00'

Date: 03/20/24 COA#: 28403

Gensler
MAIN OFFICE
M. ARTHUR GENSLER JR. & ASSOCIATES
FL QUALIFIER'S LIC. NO. AR96486
220 MONTGOMERY STREET, SUITE 200
SAN FRANCISCO, CA 94104 USA
Tel (415) 433.3700
Fax (415) 836.4599

SATELLITE OFFICE
M. ARTHUR GENSLER JR. & ASSOCIATES
545 NW 26TH ST
SUITE 250
MIAMI, FL 33127 USA
Tel (305) 350.7070
Fax (305) 350.7071

PROJECT NAME: NW 43RD & 53RD
PROJECT ADDRESS: 5480 NW 43RD STREET GAINESVILLE, FL 32653

STORE #: 10820
PROJECT #: 34769-081
ISSUE DATE: 03-15-2024
DESIGN MANAGER:
PRODUCTION DESIGNER: SEI
CHECKED BY: GRS

Revision Schedule

Rev	Date	By	Description

SHEET TITLE:
PANEL SCHEDULES AND ONE-LINE DIAGRAM
SCALE: AS SHOWN

SHEET NUMBER:
E601

MECHANICAL PLAN NOTES

1. EXISTING TRANE THC120F3RGA, 10 TON ROOFTOP UNIT TO REMAIN. CONTRACTOR SHALL BALANCE EXISTING UNIT TO PROVIDE 4000 CFM OF SUPPLY AIR AND 255 CFM OF OUTDOOR AIR. FIELD VERIFY EXACT LOCATION
2. EXISTING TRANE THC102F3RGA, 8.5 TON ROOFTOP UNIT TO REMAIN. CONTRACTOR SHALL BALANCE EXISTING UNIT TO PROVIDE 3400 CFM OF SUPPLY AIR AND 215 CFM OF OUTDOOR AIR. FIELD VERIFY EXACT LOCATION
3. VERIFY EXISTING CONDITIONS. IF NOT PRESENT, DUCT SMOKE DETECTOR ON SUPPLY SIDE DUCT AND SHUTDOWN RELAY SHALL BE FURNISHED BY THE ELECTRICAL CONTRACTOR FOR INSTALLATION BY THE MECHANICAL CONTRACTOR. ALL WIRING SHALL BE BY THE ELECTRICAL CONTRACTOR.
4. EXISTING SUPPLY AIR DUCTWORK TO REMAIN.
5. EXISTING RETURN AIR DUCTWORK TO REMAIN.
6. EXISTING OPEN END RETURN AIR DUCT TO REMAIN.
7. EXISTING SUPPLY AIR DIFFUSER TO REMAIN. CONTRACTOR SHALL CLEAN AND REPAIR DIFFUSER TO A LIKE NEW CONDITION. IF THE DEVICE CANNOT BE REPAIRED TO A LIKE NEW CONDITION, IT SHALL BE REPLACED WITH A NEW DIFFUSER THAT MATCHES THE EXISTING DEVICE IN EVERY RESPECT. BALANCE TO THE INDICATED CFM.
8. RELOCATE EXISTING SUPPLY DIFFUSER TO THE LOCATION SHOWN. EXTEND DUCTWORK AS REQUIRED. CONTRACTOR SHALL CLEAN AND REPAIR DIFFUSER TO A LIKE NEW CONDITION. IF THE DEVICE CANNOT BE REPAIRED TO A LIKE NEW CONDITION, IT SHALL BE REPLACED WITH A NEW DIFFUSER THAT MATCHES THE EXISTING DEVICE IN EVERY RESPECT. BALANCE TO THE INDICATED CFM.
9. EXISTING RETURN AIR GRILLE TO REMAIN. CONTRACTOR SHALL CLEAN AND REPAIR GRILLE TO A LIKE NEW CONDITION. IF THE DEVICE CANNOT BE REPAIRED TO A LIKE NEW CONDITION, IT SHALL BE REPLACED WITH A NEW GRILLE THAT MATCHES THE EXISTING DEVICE IN EVERY RESPECT.
10. EXISTING GREENHECK EXHAUST FAN TO REMAIN. CONTRACTOR SHALL BALANCE EXISTING FAN TO ALLOW 200 CFM OF EXHAUST AIR. FIELD VERIFY EXACT LOCATION. CONTRACTOR TO CONFIRM IN THE FIELD EXISTING FAN LOCATION IS A MINIMUM OF 10'0" FROM ANY EXISTING OUTDOOR AIR INTAKE.
11. EXISTING EXHAUST AIR DUCTWORK UP TO EXIST. EF-1 ON ROOF TO REMAIN.
12. EXISTING EXHAUST AIR GRILLE TO REMAIN. CONTRACTOR SHALL CLEAN AND REPAIR GRILLE TO A LIKE NEW CONDITION. IF THE DEVICE CANNOT BE REPAIRED TO A LIKE NEW CONDITION, IT SHALL BE REPLACED WITH A NEW GRILLE THAT MATCHES THE EXISTING DEVICE IN EVERY RESPECT.
13. UNDERCUT DOOR 1" TO ALLOW TRANSFER OF AIR.
14. PROVIDE TEMPORARY CONSTRUCTION THERMOSTAT. MOUNT (2) THERMOSTATS AT 48" ABOCE FINISHED FLOOR. COORDINATE LOCATION WITH CONSTRUCTION MANAGER. FINAL EMS THERMOSTAT PROVIDED BY VENSTAR. MOUNT VENSTAR REMOTE TEMPERATURE SENSOR AT 60" AFF.
15. PROVIDE NEW FAN COIL AS NOTED ON PLANS AND SCHEDULED ON SHEET M501.
16. PROVIDE NEW AIR-SOURCE HEAT PUMP AS NOTED ON PLANS AND SCHEDULED ON SHEET M501.
17. PROVIDE REFRIGERANT LINES FROM ASHP-1 ON ROOF TO FC-1 IN WORKROOM. LINES SHALL BE SIZED ACCORDING TO MANUFACTURER'S SPECIFICATIONS. PROVIDE ALL ACCESSORIES AS REQUIRED BY MANUFACTURER FOR COMPLETE WORKING SYSTEM, INCLUDING ANY ACCESSORIES ASSOCIATED WITH LONG LENGTH APPLICATIONS WHERE APPLICABLE.
18. INSTALL REMOTE CONDENSING UNIT COND-1 FOR ICE MACHINE. SEE ARCHITECTS SHEET FOR FURTHER INFORMATION. INSTALL REFRIGERANT LINE SET, THERMOSTATIC EXPANSION VALVE, SOLENOID VALVE, TEMPERATURE CONTROL, SIGHT GLASS, FILTER DRIER, PRESSURE CONTROL, LOW AMBIENT CONTROLS, AND WATERPROOF HOUSING. TRAP AND SLOPE REFRIGERANT LINES PER MANUFACTURERS RECOMMENDATIONS. INSTALLATION SHALL COMPLY WITH ASHRAE/ANSI STANDARD 15. INSTALL UNIT LEVEL ON BASE PAD OR TAILS IN ACCORDANCE WITH MANUFACTURERS REQUIREMENTS. COORDINATE EXACT LOCATION WITH LANDLORD REPRESENTATIVE, STARBUCKS CONSTRUCTION MANAGER, AND EXISTING STRUCTURAL CONDITIONS.

MECHANICAL GENERAL NOTES

A. EXISTING CONDITIONS ARE BASED ON RECORD DRAWINGS PROVIDED BY THE OWNER. CONTRACTOR SHALL ADJUST TO ACTUAL FIELD CONDITIONS AT NO ADDITIONAL EXPENSE TO THE PROJECT.

B. ALL WORK SHALL BE COMPLETED IN ACCORDANCE WITH ALL APPLICABLE GOVERNMENT AND LOCAL CODES.

C. MECHANICAL CONTRACTOR SHALL FIELD COORDINATE WITH ELECTRICAL CONTRACTOR FOR ALL POWER REQUIREMENTS.

D. THE CONTRACTOR SHALL COOPERATE WITH THE OTHER TRADES SO THAT THE INSTALLATION OF ALL EQUIPMENT MAY BE PROPERLY COORDINATED.

E. ALL EQUIPMENT FURNISHED SHALL FIT THE SPACE AVAILABLE WITH CONNECTIONS IN THE REQUIRED LOCATIONS AND WITH ADEQUATE SPACE FOR OPERATING AND SERVICING. THE DRAWINGS ARE GENERALLY DIAGRAMMATIC AND INDICATE THE INTENT OF THE INSTALLATION WHILE THE SPECIFICATIONS AND EQUIPMENT LIST DENOTE THE TYPE AND QUALITY OF MATERIAL AND WORKMANSHIP TO BE USED. THE DRAWINGS SHALL NOT BE SCALED FOR EXACT MEASUREMENTS. WHERE A CONFLICT EXISTS BETWEEN THE DRAWINGS AND THE SPECIFICATIONS, THE HIGHER AND/OR MORE COSTLY STANDARD WILL APPLY. THE CONTRACTOR SHALL PROMPTLY NOTIFY THE ENGINEER WHOSE DECISION SHALL BE FINAL. NO ALLOWANCE WILL BE MADE SUBSEQUENTLY IN THIS REGARD ON BEHALF OF THE CONTRACTOR AFTER AWARD OF THE CONTRACT.

F. COORDINATE DUCT ROUTING AND HEIGHTS WITH GENERAL CONTRACTOR. VERIFY ALL CLEARANCES BEFORE STARTING WORK.

G. THE CONTRACTOR SHALL INSTALL ALL PIPING, DUCTWORK AND EQUIPMENT AS REQUIRED TO CONFORM TO THE STRUCTURE, AVOID OBSTRUCTIONS, PRESERVE CEILING HEIGHTS AND HEADROOM AND MAKE ALL EQUIPMENT REQUIRING MAINTENANCE OR REPAIR ACCESSIBLE.

H. ALL DUCT CONNECTIONS TO HVAC EQUIPMENT MUST BE MADE WITH FLEXIBLE CONNECTORS.

I. DO NOT ATTACH ANYTHING TO DECK ABOVE. ATTACH TO STRUCTURE (i.e. BEAMS, JOISTS) ONLY. DUCT HANGERS SHALL BE INSTALLED IN ACCORDANCE WITH LOCAL CODE. ALL CONNECTIONS TO JOISTS SHALL BE MADE AT THE TOP CORD.

J. ALL DUCT DIMENSIONS INDICATED ARE CLEAR INSIDE DIMENSIONS. ALL SUPPLY AND UNTEMPERED OUTDOOR AIR DUCTWORK SHALL BE LINED WITH 1" ACOUSTICAL DUCT LINER OR WRAPPED WITH 1-1/2" THICK FIRE RETARDANT FIBERGLASS WITH A REINFORCED ALUMINUM FOIL JACKET AND SHALL BE APPROVED FOR USE BY SMACNA AND NAIMA. RETURN AIR TRANSFER DUCTS AND RETURN DUCTWORK WITHIN 10 FEET OF THE UNIT FAN SHALL BE LINED WITH 1" ACOUSTICAL DUCT LINER.

K. ALL SUPPLY AND UNTEMPERED OUTDOOR AIR DUCTWORK VISIBLE TO THE PUBLIC SHALL BE INTERNALLY LINED AND PAINTED TO MATCH THE SURROUNDING AREA. DUCT WRAP INSULATION IS NOT PERMITTED IN THESE AREAS.

L. TENANT'S CONTRACTOR SHALL BE RESPONSIBLE FOR THE FIELD VERIFICATION OF ALL UTILITY RUNS AND/OR OTHER IMPROVEMENTS LOCATED ON THE PREMISES PRIOR TO BIDDING. TENANT'S CONTRACTOR SHALL ALSO BE RESPONSIBLE FOR ALL COSTS RELATING TO THE RELOCATION OF, DAMAGE TO, REPAIR OF ANY EXISTING UTILITY RUNS AND/OR IMPROVEMENTS WHICH ARE DAMAGED AS A RESULT OF TENANT'S WORK IN OR AROUND THE PREMISES.

M. ALL ROOFING WORK SHALL BE PERFORMED BY LANDLORD'S APPROVED ROOFING CONTRACTOR AT TENANT'S EXPENSE, IF REQUIRED IN LEASE OR TENANT CRITERIA MANUAL.

N. MECHANICAL CONTRACTOR SHALL PROVIDE TENANT WITH A WRITTEN ONE (1) YEAR MANUFACTURER'S WARRANTY ON ALL HVAC EQUIPMENT PROVIDED AND / OR INSTALLED. THE WARRANTY SHALL INCLUDE ALL LABOR, MATERIALS AND THREE (3) ROUTINE SERVICES INCLUDING FILTER CHANGES DURING A ONE (1) YEAR PERIOD.

O. AT THE COMPLETION OF CONSTRUCTION AN NEBB, AABC OR TABB CERTIFIED AIR BALANCE REPORT SHALL BE SUBMITTED TO THE ENGINEER AND LANDLORD. THE BALANCING MUST BE COMPLETED BY AN INDEPENDENT, THIRD PARTY CONTRACTOR WITH NO TIES TO THE INSTALLING CONTRACTORS.

P. ALL THERMOSTATS, SENSORS, AND ASSOCIATED CONTROLS SHALL BE COORDINATED WITH VENSTAR.

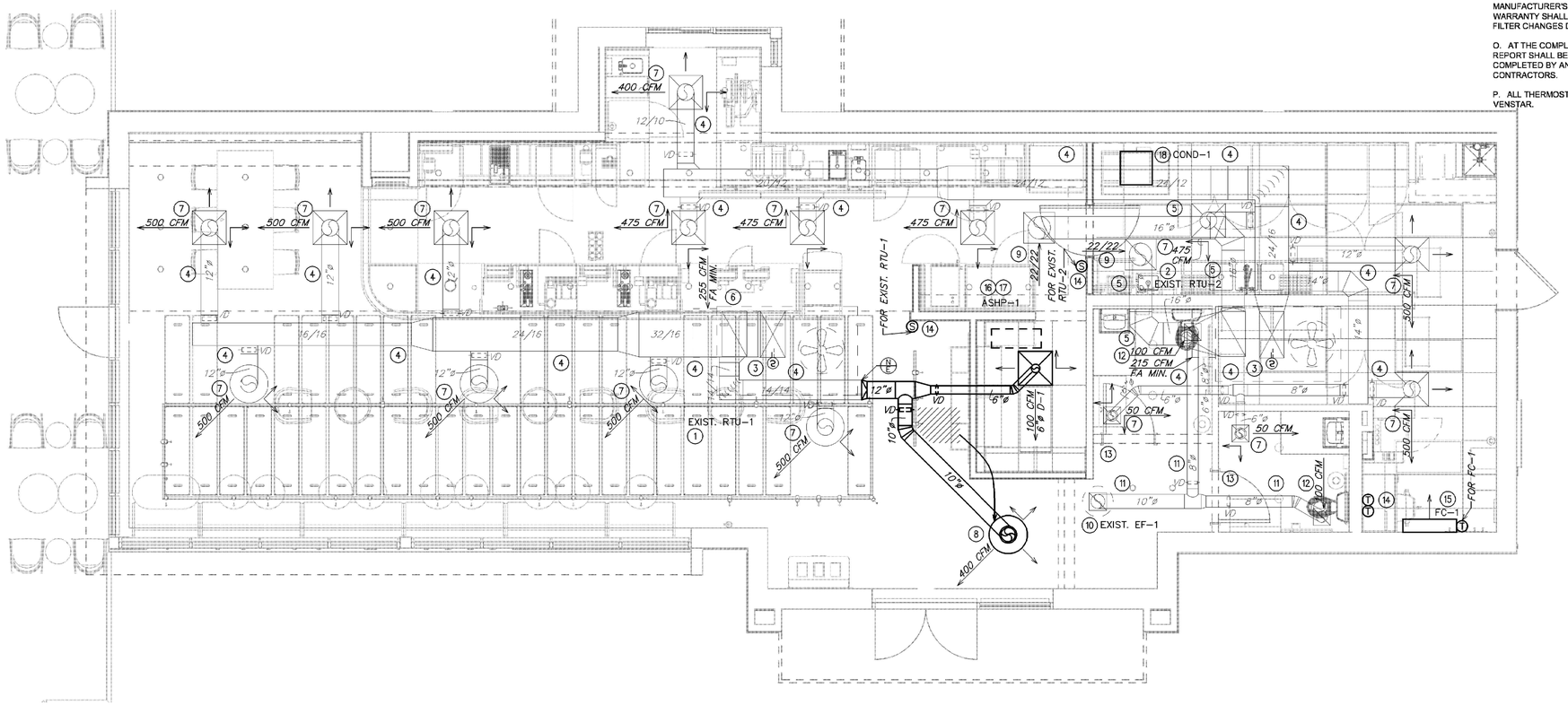

1 MECHANICAL DESIGN PLAN
Scale: 1/4" = 1'-0"

N

LEGEND
EXISTING
NEW WORK
NEW TO EXISTING CONNECTION

ROOF ACCESS TO EQUIPMENT WITHIN 10 FEET OF ROOF EDGE MUST BE PROTECTED BY A GUARD RAIL.

Schnackel engineers
New York • Miami • Orlando • Los Angeles • Seattle • Honolulu
800-581-0963 www.schnackel.com

PERMIT SET - FOR CONSTRUCTION USE

© 2022 STARBUCKS COFFEE COMPANY

STARBUCKS®
2401 UTAH AVENUE SOUTH
SEATTLE, WASHINGTON 98134
(206) 318-1575

THESE DRAWINGS AND THE PROJECT MANUAL ARE CONFIDENTIAL AND SHALL REMAIN THE SOLE PROPERTY OF STARBUCKS CORPORATION, WHICH IS THE OWNER OF THE COPYRIGHT IN THIS WORK. THEY SHALL NOT BE REPRODUCED (IN WHOLE OR IN PART), SHARED WITH THIRD PARTIES OR USED IN ANY MANNER ON OTHER PROJECTS OR EXTENSIONS TO THIS PROJECT WITHOUT THE PRIOR WRITTEN CONSENT OF STARBUCKS CORPORATION. THESE DRAWINGS AND SPECIFICATIONS ARE INTENDED TO EXPRESS DESIGN INTENT FOR A PROTOTYPICAL STARBUCKS STORE (WHICH IS SUBJECT TO CHANGE AT ANYTIME) AND DO NOT REFLECT ACTUAL SITE CONDITIONS. NEITHER PARTY SHALL HAVE ANY OBLIGATION NOR LIABILITY TO THE OTHER (EXCEPT STATED ABOVE) UNTIL A WRITTEN AGREEMENT IS FULLY EXECUTED BY BOTH PARTIES.

STARBUCKS TEMPLATE VERSION: t2023.08.28

GREGORY ROY SCHNACKEL LICENSE No PE 0048442 STATE OF FLORIDA PROFESSIONAL ENGINEER

Digitally signed by Gregory R Schnackel
Date: 2024.03.20 16:15:27-05'00'

Date: 03/20/24 COA#: 28403

Gensler
MAIN OFFICE
M. ARTHUR GENSLER JR. & ASSOCIATES
FL QUALIFIER'S LIC. NO. AA26488
220 MONTGOMERY STREET, SUITE 200
SAN FRANCISCO, CA 94104 USA
Tel (415) 433.3700
Fax (415) 836.4599

SATELLITE OFFICE
M. ARTHUR GENSLER JR. & ASSOCIATES
545 NW 26TH ST
SUITE 250
MIAMI, FL 33127 USA
Tel (305) 350.7079
Fax (305) 200.7071

PROJECT NAME:
NW 43RD & 53RD

PROJECT ADDRESS:
5480 NW 43RD STREET
GAINESVILLE, FL 32653

STORE #:	10820
PROJECT #:	34769-081
ISSUE DATE:	03-15-2024
DESIGN MANAGER:	
PRODUCTION DESIGNER:	SEI
CHECKED BY:	GRS

Revision Schedule

Rev	Date	By	Description

SHEET TITLE:
MECHANICAL DESIGN PLAN
SCALE: AS SHOWN

SHEET NUMBER:
M101

SE JOB# 240195

AIR SOURCE HEAT PUMPS

MARK	LOCATION	SERVES	NOMINAL COOL (TONS)	HEATING AT 47F (MBH)	ELECTRICAL VOLT	PH	MCA	MOCP	SEER2 /EER	HSPF2 /COP	MANUFACTURER	MODEL NUMBER	REMARKS
ASHP–1	ROOF	FC–1	1.5	18.0	208	1	16.0	25	21.5/–	10.7/–	CARRIER	38MARBQ18	(1–3)

REMARKS:
1. PROVIDE EQUIPMENT WITH SCCR GREATER THAN THE AVAILABLE FAULT CURRENT AT THE EQUIPMENT OR UPSTREAM PANELBOARD. REFER TO THE ELECTRICAL ONE LINE DIAGRAM AND PANEL SCHEDULES FOR AVAILABLE FAULT CURRENT AT UPSTREAM PANELBOARD.
2. PROVIDE LOW AMBIENT CONTROL.
3. PROVIDE HAIL GUARD.

FAN COIL UNITS

MARK	COOLING SEN (MBH)	TOT (MBH)	COOL (TON)	HEATING AT 47F (MBH)	ELEC (KW)	SUPPLY AIR (CFM)	EXT. S.P. (IN)	ELECTRICAL FAN HP	VOLT	PH	MCA	MOCP	WEIGHT (LBS)	SEER2 /EER	HSPF2 /COP	CARRIER MODEL NUMBER	REMARKS
FC–1	13.4	19.4	1.5	20.9	–	600	–	0.04	208	1	0.1625	–	27	21.5/–	10.7/–	40MAHBQ18	(1)

CARRIER IS THE BASIS OF DESIGN. HIGH EFFICIENCY MAGIC AIRE, JOHNSON CONTROLS, LENNOX OR TRANE ARE EQUAL.
COOLING CAPACITIES ARE BASED ON AHRI STANDARD 210/240 OR 340/360: 80°F DB/ 67°F WB INDOOR ENTERING AIR TEMPERATURE, 95°F DB AIR ENTERING OUTDOOR FAN. SCHEDULED UNIT MAY DIFFER FROM AHRI STANDARD CFM.

REMARKS:
1. PROVIDE WITH WIRELESS CONTROLLER.

DIFFUSERS, GRILLES AND REGISTERS

MARK	SERVICE	LOCATION	CEILING TYPE	MOUNTING TYPE	MANUFACTURER	MODEL NUMBER	REMARKS
D–1	SUPPLY	CEILING	AC TILE	LAY–IN	TITUS	OMNI X 3 24x24 26 D–75	(1–3)

REMARKS:
1. TITUS IS THE BASE OF DESIGN. KRUEGER, PRICE, NAILOR, CARNES ARE EQUAL. NO EXCEPTIONS.
2. SEE PLAN FOR NECK SIZE.
3. COORDINATE WITH ARCHITECT AND STARBUCKS CONSTRUCTION MANAGER ON FINAL FINISH AND COLOR FOR ALL DEVICES.

HVAC DESIGN REQUIRES	YES	NO
DUCT SMOKE DETECTOR	X	
FIRE DAMPER(S)		X
SMOKE DAMPER(S)		X
FIRE RATED ENCLOSURE		X
FIRE RATED ROOF/FLOOR CEILING ASSEMBLY		X
FIRE STOPPING		X
SMOKE CONTROL		X

8 HVAC DESIGN CHART
NOT TO SCALE

DIA.	WIRE DIA.	ROD	STRAP
10" DN	ONE 12 GA.	1/4"	1" x 22 GA.
11–18"	TWO 12 GA. OR ONE 8 GA.	1/4"	1" x 22 GA.
19–24"	TWO 10 GA.	1/4"	1" x 22 GA.
25–36"	TWO 8 GA.	3/8"	1" x 20 GA.
37–50"	–	TWO 3/8"	TWO 1" x 20 GA.
51–60"	–	TWO 3/8"	TWO 1" x 18 GA.
61–84"	–	TWO 3/8"	TWO 1" x 16 GA.
85–96"	–	TWO 1/2"	TWO 1 1/2" x 16 GA.

NOTES:
1. STRAPS ARE GALVANIZED STEEL; RODS ARE UNCOATED OR GALVANIZED STEEL; WIRE IS BLACK ANNEALED, BRIGHT BASIC OR GALVANIZED STEEL. ALL ARE ALTERNATIVES.
2. TABLE ALLOWS FOR CONVENTIONAL WALL THICKNESS, AND JOINT SYSTEMS PLUS ONE LB/SF OF INSULATION WEIGHT. IF HEAVIER DUCTS ARE TO BE INSTALLED, ADJUST HANGER SIZES TO BE WITHIN THEIR LOAD LIMITS.

7 ROUND DUCT HANGER TABLE
NOT TO SCALE

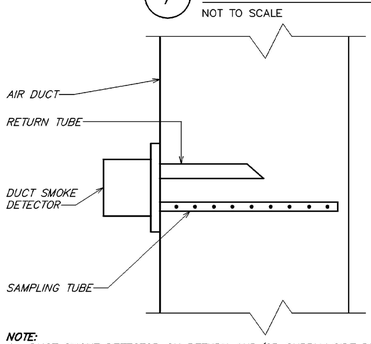

NOTE:
1. DUCT SMOKE DETECTOR ON RETURN AND/OR SUPPLY SIDE DUCT AND SHUTDOWN RELAY SHALL BE FURNISHED BY THE ELECTRICAL CONTRACTOR FOR INSTALLATION BY THE MECHANICAL CONTRACTOR. ALL WIRING SHALL BE BY THE ELECTRICAL CONTRACTOR.

6 DUCT SMOKE DETECTOR DETAIL
NOT TO SCALE

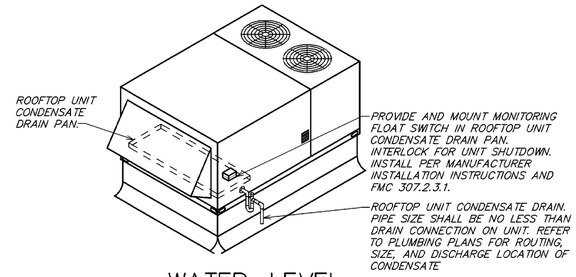

5 WATER–LEVEL MONITORING DEVICE DETAIL
NOT TO SCALE

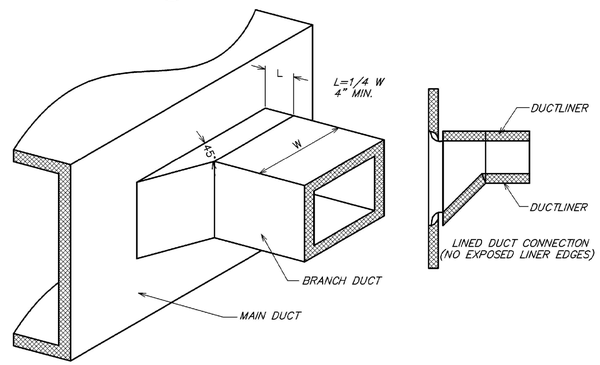

ISOMETRIC VIEW SECTION VIEW

4 45° BRANCH DUCT TAP
NOT TO SCALE

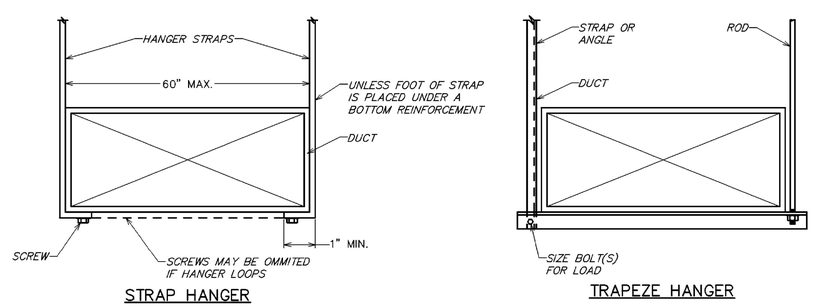

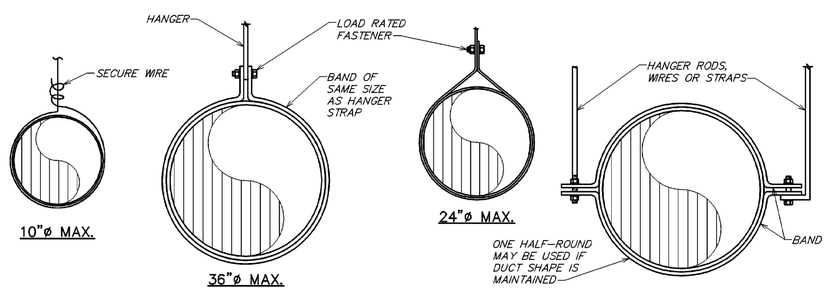

NOTE: HANGERS MUST NOT DEFORM DUCT SHAPE

3 DUCT HANGER DETAIL
NOT TO SCALE

HEATING VENTILATING AND AIR CONDITIONING SYMBOLS

SYMBOL	DESCRIPTION	SYMBOL	DESCRIPTION
T	THERMOSTAT WITH CONTROL WIRING	–MD–	MANUAL VOLUME DAMPER
		–MD–	MOTORIZED DAMPER
H	HUMIDISTAT (BY EQUIPMENT MANUFACTURER)	–FD–	FIRE DAMPER
	ROUND DUCT RISER OR DROP	–SD–	SMOKE DAMPER
	SUPPLY OR OUTDOOR AIR DUCT RISER OR DROP (SA OR OA)	–FD,SD–	COMBINATION FIRE AND SMOKE DAMPER
	RETURN OR EXHAUST AIR DUCT RISER OR DROP (RA OR EA)	400 CFM 10"ø D–X	SQUARE/RECTANGULAR DIFFUSER WITH AIRFLOW TAG. SEE SCHEDULE FOR EXACT DIFFUSER TYPE. PROVIDE SECTORIZING BAFFLES TO ACHIEVE AIRFLOW PATTERN SHOWN.
10/6	RECTANGULAR DUCT WITH SIZE FIRST FIGURE IS SIDE SHOWN		
10"ø	ROUND DUCT WITH SIZE	400 CFM 10"ø D–X	ROUND DIFFUSER WITH AIRFLOW TAG SEE SCHEDULE FOR EXACT DIFFUSER TYPE
10"ø	FLEXIBLE DUCT WITH SIZE		
	ELBOW WITH TURNING VANES	400 CFM 12/6 D–X	SQUARE/RECTANGULAR SUPPLY GRILLE WITH AIRFLOW TAG. SEE SCHEDULE FOR EXACT DIFFUSER TYPE. ADJUST BLADES OR PATTERN CONTROLLER TO ACHIEVE AIRFLOW PATTERN SHOWN.
	EXISTING		
	NEW WORK		
	POINT OF CONNECTION BETWEEN NEW AND EXISTING WORK.	100 CFM 6/6 G–X	EXHAUST AIR GRILLE WITH AIRFLOW TAG SEE SCHEDULE FOR EXACT GRILLE TYPE
1,200 CFM OA	MINIMUM OUTDOOR AIR	6/6 G–X	RETURN AIR GRILLE WITH TAG SEE SCHEDULE FOR EXACT GRILLE TYPE
	DUCT SMOKE DETECTOR		HATCH PATTERN INDICATES ITEMS BEING REMOVED.

NOTE: NOT EVERY DEVICE OR SYMBOL IN THIS LEGEND MAY BE USED ON THIS PROJECT.

HEATING VENTILATING AND AIR CONDITIONING ABBREVIATIONS

ABBREVIATION	TERM	ABBREVIATION	TERM
AFF	ABOVE FINISHED FLOOR	MBH	1000 BTU PER HOUR
CFM	CUBIC FEET PER MINUTE	FA OR OA	OUTDOOR AIR
EA	EXHAUST AIR	RA	RETURN AIR
HVAC	HEATING VENTILATING AND AIR CONDITIONING	SA	SUPPLY AIR

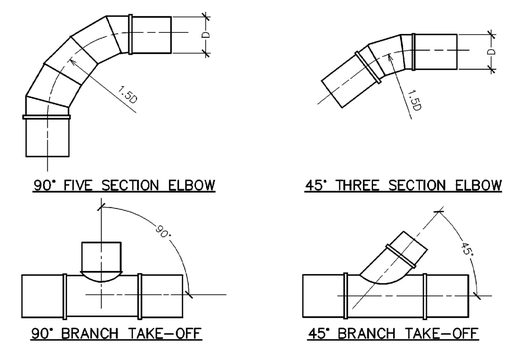

2 TYPICAL ROUND DUCT FITTINGS
NOT TO SCALE

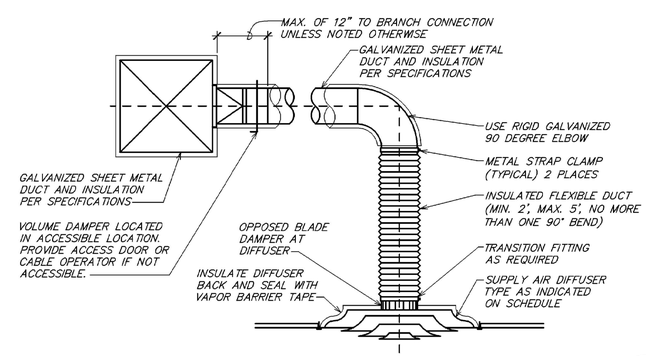

1 TYPICAL DIFFUSER CONNECTION
NOT TO SCALE

Schnackel engineers
New York ★ Walpole ★ Orlando ★ Los Angeles ★ Seattle ★ Honolulu
800-581-0963 www.schnackel.com

SE JOB#: 240195

PERMIT SET - FOR CONSTRUCTION USE

© 2022 STARBUCKS COFFEE COMPANY

STARBUCKS®
2401 UTAH AVENUE SOUTH
SEATTLE, WASHINGTON 98134
(206) 318-1575

THESE DRAWINGS AND THE PROJECT MANUAL ARE CONFIDENTIAL AND SHALL REMAIN THE SOLE PROPERTY OF STARBUCKS CORPORATION, WHICH IS THE OWNER OF THE COPYRIGHT IN THIS WORK. THEY SHALL NOT BE REPRODUCED (IN WHOLE OR IN PART), SHARED WITH THIRD PARTIES OR USED IN ANY MANNER ON OTHER PROJECTS OR EXTENSIONS TO THIS PROJECT WITHOUT THE PRIOR WRITTEN CONSENT OF STARBUCKS CORPORATION. THESE DRAWINGS AND SPECIFICATIONS ARE INTENDED TO EXPRESS DESIGN INTENT FOR A PROTOTYPICAL STARBUCKS STORE (WHICH IS SUBJECT TO CHANGE AT ANYTIME) AND DO NOT REFLECT ACTUAL SITE CONDITIONS. NEITHER PARTY SHALL HAVE ANY OBLIGATION NOR LIABILITY TO THE OTHER (EXCEPT STATED ABOVE) UNTIL A WRITTEN AGREEMENT IS FULLY EXECUTED BY BOTH PARTIES.

STARBUCKS TEMPLATE VERSION: i2023.08.28

GREGORY ROY SCHNACKEL LICENSE No PE 0048442 STATE OF FLORIDA PROFESSIONAL ENGINEER
Digitally signed by Gregory R Schnackel
Date: 2024.03.20 16:15:34-05'00'

Date: 03/20/24 COA#: 28403

Gensler
MAIN OFFICE
M. ARTHUR GENSLER JR. & ASSOCIATES
FL QUALIFIERS LIC. NO. AR96486
220 MONTGOMERY STREET, SUITE 290
SAN FRANCISCO, CA 94104 USA
Tel (415) 433.3700
Fax (415) 836.4599
SATELLITE OFFICE
M. ARTHUR GENSLER JR. & ASSOCIATES
540 NW 25TH ST
SUITE 250
MIAMI, FL 33127 USA
Tel (305) 350.7070
Fax (305) 350.7071

PROJECT NAME:
NW 43RD & 53RD

PROJECT ADDRESS:
5480 NW 43RD STREET
GAINESVILLE, FL 32653

STORE #:	10820
PROJECT #:	34769-081
ISSUE DATE:	03-15-2024
DESIGN MANAGER:	
PRODUCTION DESIGNER:	SEI
CHECKED BY:	GRS

Revision Schedule

Rev	Date	By	Description

SHEET TITLE:
MECHANICAL DETAILS

SCALE: AS SHOWN

SHEET NUMBER:
M501

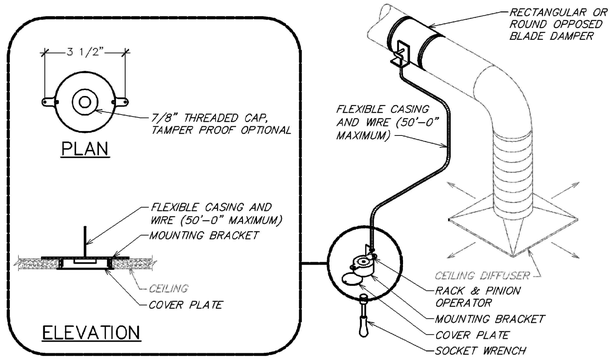

4 REMOTE VOLUME DAMPER CONTROLLER

NOT TO SCALE

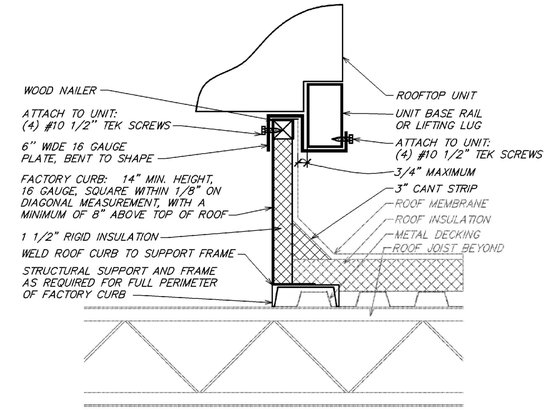

NOTES:
1. USE A MINIMUM OF (1) PLATE PER SIDE OF UNIT.
2. PLATE MUST BE PAINTED WHERE IT CONTACTS RAIL.
3. USE (8) SCREWS TO SECURE PLATE, NO SMALLER THAN #10x1/2''
4. CONTRACTOR IS RESPONSIBLE FOR VERIFICATION OF, AND COMPLIANCE WITH ALL LOCAL CODES

2 ROOFTOP EQUIPMENT HURRICANE TIE-DOWN DETAIL

NOT TO SCALE

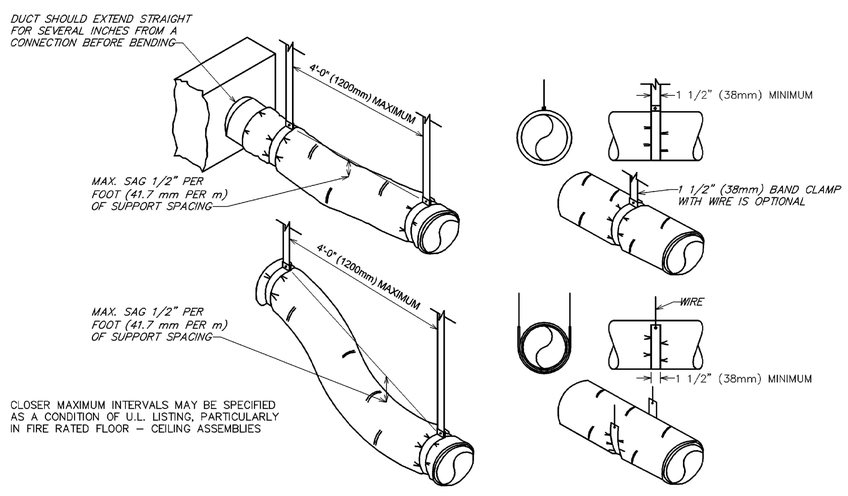

3 FLEXIBLE DUCT SUPPORTS

NOT TO SCALE

Air System Sizing Summary for 0 - Block

Project Name: 240195hvac_HAP47_20240304112019 — 03/04/2024
Prepared by: Schnackel Engineers — 09:51AM

Air System Information

Air System Name	0 - Block	Number of zones	1
Equipment Class	PKG VERT	Floor Area	1965.0 ft²
Air System Type	SZCAV	Location	Gainesville, Florida

Sizing Calculation Information

Zone and Space Sizing Method:

Zone CFM	Peak zone sensible load	Calculation Months	Jan to Dec
Space CFM	Individual peak space loads	Sizing Data	Calculated

Central Cooling Coil Sizing Data

Total coil load	23.7	Tons	Load occurs at	Aug 1400	
Total coil load	284.0	MBH	OA DB / WB	93.4 / 76.9	°F
Sensible coil load	212.4	MBH	Entering DB / WB	73.9 / 63.7	°F
Coil CFM at Aug 1400	10867	CFM	Leaving DB / WB	55.7 / 54.8	°F
Max block CFM	10867	CFM	Coil ADP	53.7	°F
Sum of peak zone CFM	10867	CFM	Bypass Factor	0.100	
Sensible heat ratio	0.748		Resulting RH	58	%
ft²/Ton	83.0		Design supply temp.	55.0	°F
BTU/(hr-ft²)	144.5		Zone T-stat Check	1 of 1	OK
Water flow @ 10.0 °F rise	N/A		Max zone temperature deviation	0.0	°F

Central Heating Coil Sizing Data

Max coil load	83.0	MBH	Load occurs at	Des Htg	
Coil CFM at Des Htg	10867	CFM	BTU/(hr-ft²)	42.2	
Max coil CFM	10867	CFM	Ent. DB / Lvg DB	68.1 / 75.2	°F
Water flow @ 20.0 °F drop	N/A				

Supply Fan Sizing Data

Actual max CFM	10867	CFM	Fan motor BHP	1.79	BHP
Standard CFM	10807	CFM	Fan motor kW	1.42	kW
Actual max CFM/ft²	5.53	CFM/ft²	Fan static	0.60	in wg

Outdoor Ventilation Air Data

Design airflow CFM	470	CFM	CFM/person	13.71	CFM/person
CFM/ft²	0.24	CFM/ft²			

1 HEATING AND COOLING LOAD CALCULATIONS

NOT TO SCALE

Schnackel engineers
New Orleans Metro & Gretna Los Angeles & Sheffield Honolulu
800-581-0963 www.schnackel.com

PERMIT SET - FOR CONSTRUCTION USE

© 2022 STARBUCKS COFFEE COMPANY

STARBUCKS®
2401 UTAH AVENUE SOUTH
SEATTLE, WASHINGTON 98134
(206) 318-1575

THESE DRAWINGS AND THE PROJECT MANUAL ARE CONFIDENTIAL AND SHALL REMAIN THE SOLE PROPERTY OF STARBUCKS CORPORATION, WHICH IS THE OWNER OF THE COPYRIGHT IN THIS WORK. THEY SHALL NOT BE REPRODUCED (IN WHOLE OR IN PART), SHARED WITH THIRD PARTIES OR USED IN ANY MANNER ON OTHER PROJECTS OR EXTENSIONS TO THIS PROJECT WITHOUT THE PRIOR WRITTEN CONSENT OF STARBUCKS CORPORATION. THESE DRAWINGS AND SPECIFICATIONS ARE INTENDED TO EXPRESS DESIGN INTENT FOR A PROTOTYPICAL STARBUCKS STORE (WHICH IS SUBJECT TO CHANGE AT ANYTIME) AND DO NOT REFLECT ACTUAL SITE CONDITIONS. NEITHER PARTY SHALL HAVE ANY OBLIGATION NOR LIABILITY TO THE OTHER (EXCEPT STATED ABOVE) UNTIL A WRITTEN AGREEMENT IS FULLY EXECUTED BY BOTH PARTIES.

STARBUCKS TEMPLATE VERSION: I2023.08.28

GREGORY ROY SCHNACKEL LICENSE No PE 0048442 STATE OF FLORIDA PROFESSIONAL ENGINEER

Digitally signed by Gregory R Schnackel
Date: 2024.03.20 16:15:41-05'00'

Date: 03/20/24 — COA#: 28403

Gensler

MAIN OFFICE
M. ARTHUR GENSLER JR. & ASSOCIATES
FL QUALIFIERS LIC. NO. AAB6468
220 MONTGOMERY STREET, SUITE 200
SAN FRANCISCO, CA 94104 USA
Tel (415) 433.3700
Fax (415) 836.4599

SATELLITE OFFICE
M. ARTHUR GENSLER JR. & ASSOCIATES
545 NW 26TH ST
SUITE 250
MIAMI, FL 33127 USA
Tel (305) 350.7079
Fax (305) 350.7071

PROJECT NAME: NW 43RD & 53RD

PROJECT ADDRESS: 5480 NW 43RD STREET GAINESVILLE, FL 32653

STORE #:	10820
PROJECT #:	34769-081
ISSUE DATE:	03-15-2024
DESIGN MANAGER:	
PRODUCTION DESIGNER:	SEI
CHECKED BY:	GRS

Revision Schedule

Rev	Date	By	Description

SHEET TITLE:
MECHANICAL DETAILS

SCALE: AS SHOWN

SHEET NUMBER:
M601

SE-JOB#: 240195

PLUMBING FIXTURE SCHEDULE - "P"					
DESIGN ID	COUNT	DESCRIPTION	FURN. BY	INST. BY	COMMENTS
DRAIN					
10294	6	DRAIN - FLOOR SINK SQUARE - 12IN 305MM	SB	GC	
10726	6	DRAIN - GRATE HALF SQUARE - 12IN 305MM	SB	GC	
FAUCET					
10152	1	FAUCET - DOUBLE LABORATORY WITH BENT RISER SPOUT	SB	GC	
10153	3	FAUCET - WATER TOWER - 12IN 305MM	SB	GC	
10215	1	FAUCET - DOUBLE LABORATORY WITH SWING SPOUT	SB	GC	
10597	2	FAUCET - SINGLE HANDLE	SB	GC	
11003	2	FAUCET - METERED	SB	GC	
22642	2	FAUCET - INSTANTHOT SYSTEM 2 BUTTON WITH BOILER AND BRACKET	SB	GC	KIT INCLUDES FONT, UNDERCOUNTER BOILER AND BOILER BRACKET FOR SIDE PANEL MOUNTING. BRACKET CAN BE FLOOR MOUNTED USING SET OF (4) STAINLESS STEEL LEGS, ORDERED SEPARATELY THROUGH VENDOR.
SINK					
10549	1	SINK - RINSE DROP IN SST - 12X20IN 305X510MM	SB	GC	
17565	1	SINK - RINSE WITH DRAINBOARD - 15X27IN 380X685MM	SB	GC	
22768	2	SINK - COUNTERTOP RINSER WITH WATER TOWER - 26X9IN 660X235MM	SB	GC	

GC TO TEST DOMESTIC WATER SYSTEM PRESSURE AND PROVIDE VFD WATER PRESSURE BOOSTER PUMP AS REQUIRED. SET PUMP MINIMUM PRESSURE TO 65 PSI.

GC TO PROVIDE WATTS SD-3 BACKFLOW PREVENTER AT ALL ENGINE EQUIPMENT TO INCLUDE ESPRESSO MACHINES, COFFEE MACHINE, AND DIPPER WELLS.

Schnackel engineers
New Yorkie Metro Orlando Los Angeles Austin Nevada
800-581-0963 www.schnackel.com

PERMIT SET - FOR CONSTRUCTION USE

© 2022 STARBUCKS COFFEE COMPANY

STARBUCKS®
2401 UTAH AVENUE SOUTH
SEATTLE, WASHINGTON 98134
(206) 318-1575

THESE DRAWINGS AND THE PROJECT MANUAL ARE CONFIDENTIAL AND SHALL REMAIN THE SOLE PROPERTY OF STARBUCKS CORPORATION, WHICH IS THE OWNER OF THE COPYRIGHT IN THIS WORK. THEY SHALL NOT BE REPRODUCED (IN WHOLE OR IN PART), SHARED WITH THIRD PARTIES OR USED IN ANY MANNER ON OTHER PROJECTS OR EXTENSIONS TO THIS PROJECT WITHOUT THE PRIOR WRITTEN CONSENT OF STARBUCKS CORPORATION. THESE DRAWINGS AND SPECIFICATIONS ARE INTENDED TO EXPRESS DESIGN INTENT FOR A PROTOTYPICAL STARBUCKS STORE (WHICH IS SUBJECT TO CHANGE AT ANYTIME) AND DO NOT REFLECT ACTUAL SITE CONDITIONS. NEITHER PARTY SHALL HAVE ANY OBLIGATION NOR LIABILITY TO THE OTHER (EXCEPT STATED ABOVE) UNTIL A WRITTEN AGREEMENT IS FULLY EXECUTED BY BOTH PARTIES.

STARBUCKS TEMPLATE VERSION: I2023.08.28

GREGORY ROY SCHNACKEL
LICENSE
No PE 0048442
STATE OF FLORIDA
PROFESSIONAL ENGINEER

Digitally signed by Gregory R Schnackel
Date: 2024.03.20 16:15:47-05'00'

Date: 03/20/24 COA#: 28403

Gensler
MAIN OFFICE
M. ARTHUR GENSLER JR. & ASSOCIATES
FL QUALIFIER LIC. NO. AR26498
220 MONTGOMERY STREET, SUITE 200
SAN FRANCISCO, CA 94104 USA
Tel: (415) 433.3700
Fax: (415) 836.4599

SATELLITE OFFICE
M. ARTHUR GENSLER JR. & ASSOCIATES
545 NW 26TH ST
SUITE 250
MIAMI, FL 33127 USA
Tel: (305) 350.7070
Fax: (305) 350.7071

PROJECT NAME:
NW 43RD & 53RD

PROJECT ADDRESS:
5480 NW 43RD STREET
GAINESVILLE, FL 32653

STORE #: 10820
PROJECT #: 34769-081
ISSUE DATE: 03-15-2024
DESIGN MANAGER:
PRODUCTION DESIGNER: SEI
CHECKED BY: GRS

Revision Schedule

Rev	Date	By	Description

SHEET TITLE:
PLUMBING SCHEDULES

SCALE: AS SHOWN

SHEET NUMBER:
P100

SE JOB#: 240195

GENERAL NOTES:

A. FURNISH AND INSTALL A COMPLETE AND OPERATING SYSTEM. ALL ITEMS ARE NOT NECESSARILY SHOWN.

B. PLUMBING CONTRACTOR RESPONSIBLE FOR SITE INVESTIGATION PRIOR TO START OF WORK TO REVEAL FULL SCOPE OF WORK.

C. ALL PLUMBING LINES TO BE ROUTED SUCH THAT THEY ARE NOT VISIBLE TO CUSTOMERS.

D. REFER TO MANUFACTURER SPECIFICATIONS FOR LOCATION OF CONNECTIONS UNLESS OTHERWISE NOTED.

E. COORDINATE WITH ELECTRICAL CONTRACTOR FOR POWER CONNECTION TO ALL PLUMBING EQUIPMENT.

F. DIMENSIONS ARE TO FINISH FACE UNLESS OTHERWISE NOTED.

G. REFER TO DETAIL SHEETS FOR PLUMBING FITTINGS LOCATED IN CASEWORK.

H. COLD WATER SUPPLY LINES INSIDE CASEWORK AND BAR AREA TO BE COVERED WITH 1/2" (10MM) THICK SELF SEALING, SECTIONAL CLOSED-CELL FOAM INSULATION. REFER TO SPECIFICATIONS FOR HOT WATER SUPPLY LINE INSULATION REQUIREMENTS.

I. CONTRACTOR SHALL CONTACT WATER FILTER SUPPLIER BEFORE THE TIME THAT THE FILTER SYSTEM IS TO BE STARTED UP.

J. VERIFY PROPER WATER SYSTEM WITH WATER TEST RESULTS.

K. ALL PLUMBING CLEANOUT CANNOT BE COVERED. PLUMBING CLEANOUT MUST HAVE EASY ACCESSIBILITY.

L. PROVIDE ACCESS PANELS FOR ELECTRICAL, PLUMBING AND HVAC AS SPECIFIED BY CODE OR AS DICTATED BY THE LANDLORD.

KEYED NOTES:

1. THIS SPACE IS RESERVED FOR ELECTRICAL EQUIPMENT. NO PIPING SHALL PASS BELOW, ABOVE, OR AROUND ELECTRICAL EQUIPMENT. PROVIDE CODE REQUIRED MINIMUM CLEARANCE ABOVE ELECTRICAL EQUIPMENT ACCESS SPACE.
2. 3/4" CWF TO ESPRESSO MACHINE. CONNECT 3/8" COMPRESSION BRAIDED STAINLESS STEEL HOSE FROM SHUT-OFF TO ESPRESSO MACHINE WATER INLET.
3. 1/2" CWF TO COFFEE BREWER. INSTALL SHUT-OFF IN CABINET AT 24" AFF. REDUCE TO 3/8" AT UNIT.
4. 1/2" CW AND 1/2" HW TO LAB SINK.
5. 3/4" CW TO DIPPER WELL.
6. 1/2" CWF TO ICE MACHINE. REDUCE TO 3/8" AT EQUIPMENT CONNECTION.
7. 3/8" CWF TO HOT WATER TAP. REDUCE TO 1/4" AT UNIT.
8. 1/2" CW TO SINGLE LAB FAUCET.
9. 1/2" CW AND 1/2" HW TO SINK. PROVIDE THERMOSTATIC MIXING VALVE (WATTS LFMMV) IN ACCESS PANEL TO LIMIT TEMPERATURE TO 110° F.
10. 1/2" CW & CFW TO COMBI OVEN. INSTALL SHUT-OFF IN CABINET AT 18" AFF UNDER CABINET. PROVIDE BACFKLOW PREVENTER.
11. ROUTE 3" PVC FROM ICE DIVERTER AT ICE MACHINE TO OVERHEAD ICE DISPENSER
12. CONNECT TO EXISTING CW, HW, HWR AND CFW SYSTEM OF EQUAL OR GREATER SIZE. VERIFY IN FIELD FOR EXACT SIZE AND LOCATION. MAKE ADJUSTMENTS AS NECESSARY.
13. FIXTURE IS EXISTING TO REMAIN. CONTRACTOR TO REVIEW AND BRING TO LIKE NEW CONDITION. REPLACE AS REQUIRED.

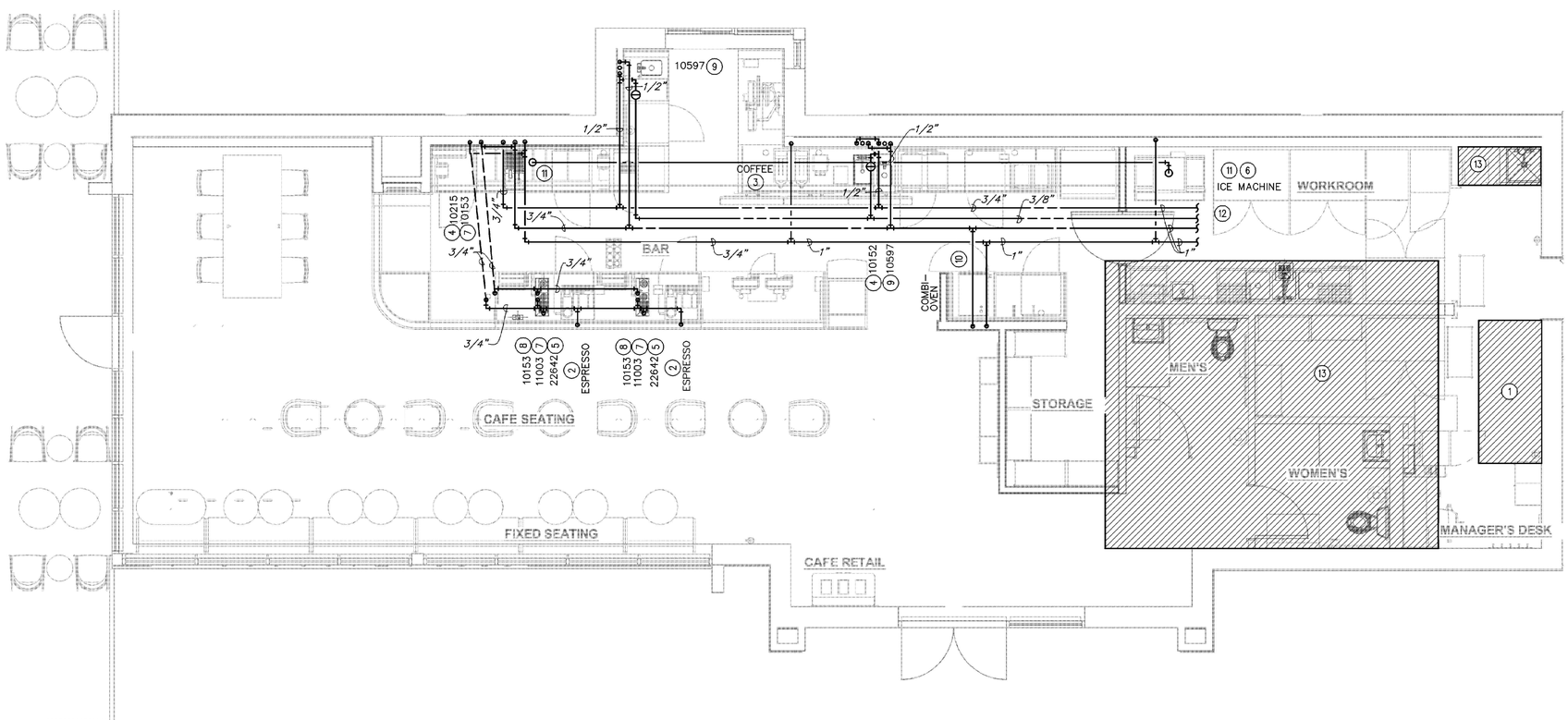

1 PLUMBING SUPPLY PLAN
Scale: 1/4" = 1'-0"

N

Schnackel engineers
River Walk Marina Chatham St. Angeles & Sevilla Historic
800-581-0963 www.schnackel.com

SE JOB#: 240185

PERMIT SET - FOR CONSTRUCTION USE

© 2022 STARBUCKS COFFEE COMPANY

STARBUCKS®
2401 UTAH AVENUE SOUTH
SEATTLE, WASHINGTON 98134
(206) 318-1575

THESE DRAWINGS AND THE PROJECT MANUAL ARE CONFIDENTIAL AND SHALL REMAIN THE SOLE PROPERTY OF STARBUCKS CORPORATION, WHICH IS THE OWNER OF THE COPYRIGHT IN THIS WORK. THEY SHALL NOT BE REPRODUCED (IN WHOLE OR IN PART), SHARED WITH THIRD PARTIES OR USED IN ANY MANNER ON OTHER PROJECTS OR EXTENSIONS TO THIS PROJECT WITHOUT THE PRIOR WRITTEN CONSENT OF STARBUCKS CORPORATION. THESE DRAWINGS AND SPECIFICATIONS ARE INTENDED TO EXPRESS DESIGN INTENT FOR A PROTOTYPICAL STARBUCKS STORE (WHICH IS SUBJECT TO CHANGE AT ANYTIME) AND DO NOT REFLECT ACTUAL SITE CONDITIONS. NEITHER PARTY SHALL HAVE ANY OBLIGATION NOR LIABILITY TO THE OTHER (EXCEPT STATED ABOVE) UNTIL A WRITTEN AGREEMENT IS FULLY EXECUTED BY BOTH PARTIES.

STARBUCKS TEMPLATE VERSION: i2023.08.28

GREGORY ROY SCHNACKEL
LICENSE
No PE 0048442
STATE OF FLORIDA
PROFESSIONAL ENGINEER

Digitally signed by Gregory R Schnackel
Date: 2024.03.20 16:15:54-05'00'

Date: 03/20/24 COA#: 28403

Gensler
MAIN OFFICE
M. ARTHUR GENSLER JR. & ASSOCIATES
FL QUALIFIER'S LIC. NO. AR96488
220 MONTGOMERY STREET, SUITE 200
SAN FRANCISCO, CA 94104 USA
Tel: (415) 433.3700
Fax: (415) 836.4599

SATELLITE OFFICE
M. ARTHUR GENSLER JR. & ASSOCIATES
545 NW 26TH ST
SUITE 250
MIAMI, FL 33127 USA
Tel: (305) 350.7079
Fax: (305) 350.7071

PROJECT NAME:
NW 43RD & 53RD

PROJECT ADDRESS:
5480 NW 43RD STREET
GAINESVILLE, FL 32653

STORE #:	10820
PROJECT #:	34769-081
ISSUE DATE:	03-15-2024
DESIGN MANAGER:	
PRODUCTION DESIGNER:	SEI
CHECKED BY:	GRS

Revision Schedule

Rev	Date	By	Description

SHEET TITLE:
PLUMBING SUPPLY PLAN
SCALE: AS SHOWN

SHEET NUMBER:
P101

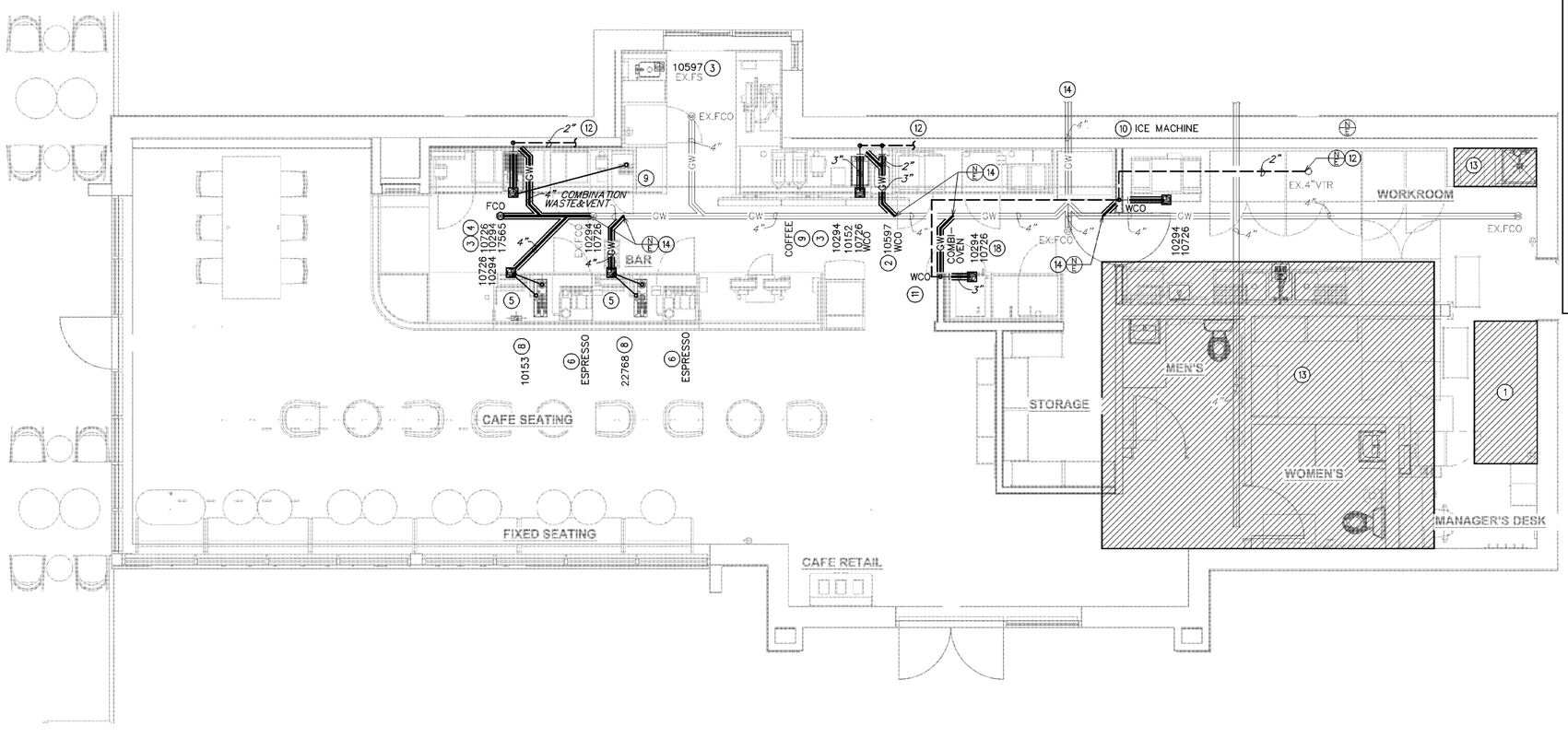

1 PLUMBING WASTE & VENT PLAN

Scale: 1/4" = 1'-0"

N

GENERAL NOTES:

A. FURNISH AND INSTALL A COMPLETE AND OPERATING SYSTEM. ALL ITEMS ARE NOT NECESSARILY SHOWN.

B. PLUMBING CONTRACTOR RESPONSIBLE FOR SITE INVESTIGATION PRIOR TO START OF WORK TO REVEAL FULL SCOPE OF WORK.

C. ALL PLUMBING LINES TO BE ROUTED SUCH THAT THEY ARE NOT VISIBLE TO CUSTOMERS.

D. REFER TO MANUFACTURER SPECIFICATIONS FOR LOCATION OF CONNECTIONS UNLESS OTHERWISE NOTED.

E. COORDINATE WITH ELECTRICAL CONTRACTOR FOR POWER CONNECTION TO ALL PLUMBING EQUIPMENT.

F. DIMENSIONS ARE TO FINISH FACE UNLESS OTHERWISE NOTED.

G. REFER TO DETAIL SHEETS FOR PLUMBING FITTINGS LOCATED IN CASEWORK.

H. COLD WATER SUPPLY LINES INSIDE CASEWORK AND BAR AREA TO BE COVERED WITH 1/2" (10MM) THICK SELF SEALING, SECTIONAL CLOSED-CELL FOAM INSULATION. REFER TO SPECIFICATIONS FOR HOT WATER SUPPLY LINE INSULATION REQUIREMENTS.

I. CONTRACTOR SHALL CONTACT WATER FILTER SUPPLIER BEFORE THE TIME THAT THE FILTER SYSTEM IS TO BE STARTED UP.

J. VERIFY PROPER WATER SYSTEM WITH WATER TEST RESULTS.

K. ALL PLUMBING CLEANOUT CANNOT BE COVERED. PLUMBING CLEANOUT MUST HAVE EASY ACCESSIBILITY.

L. PROVIDE ACCESS PANELS FOR ELECTRICAL, PLUMBING AND HVAC AS SPECIFIED BY CODE OR AS DICTATED BY THE LANDLORD.

KEYED NOTES:

1. THIS SPACE IS RESERVED FOR ELECTRICAL EQUIPMENT. NO PIPING SHALL PASS BELOW, ABOVE, OR AROUND ELECTRICAL EQUIPMENT. PROVIDE CODE REQUIRED MINIMUM CLEARANCE ABOVE ELECTRICAL EQUIPMENT ACCESS SPACE.
2. 2"WASTE DOWN, 1 1/2" VENT UP.
3. 2" INDIRECT DRAIN FROM FRONT PORTION OF SINK TO FLOOR SINK.
4. 1 1/2" INDIRECT DRAIN FROM BACK PORTION OF SINK TO FLOOR SINK.
5. 1" INDIRECT INSULATED DRAIN FROM ICE BIN TO FLOOR SINK.
6. 3/4" INDIRECT DRAIN FROM ESPRESSO/COFFEE MACHINE TO FLOOR SINK.
7. 1" INDIRECT DRAIN FROM UTENSIL RINSE SINK TO FLOOR SINK.
8. 1" INDIRECT DRAIN FROM IN-COUNTER RINSER TO FLOOR SINK.
9. 1" INDIRECT DRAIN FROM DRIP TRAY TO FLOOR SINK.
10. 1" INDIRECT DRAIN FROM ICE MACHINE TO FLOOR SINK.
11. 1" INDIRECT DRAIN FROM COMBI OVEN TO FLOOR SINK.
12. CONNECT TO EXISTING VENT SYSTEM OF EQUAL OR GREATER SIZE. EXISTING VENT TERMINATES THROUGH ROOF.
13. ALL PLUMBING FIXTURES IN THIS HATCHED AREA ARE EXISTING TO REMAIN.
14. CONNECT TO EXISTING GREASE SEWER LINE OF EQUAL OR GREATER SIZE. VERIFY IN FIELD FOR EXACT LOCATION, SIZE, AND INVERT.1500 GAL GREASE INTERCEPTOR EXISTING TO REMAIN.

LEGEND

EXISTING

NEW WORK

NEW TO EXISTING CONNECTION

Schnackel engineers

New Orleans Marina Omaha Los Angeles Seattle Honolulu

800-581-0963 www.schnackel.com

PERMIT SET - FOR CONSTRUCTION USE

© 2022 STARBUCKS COFFEE COMPANY

STARBUCKS®
2401 UTAH AVENUE SOUTH
SEATTLE, WASHINGTON 98134
(206) 318-1575

THESE DRAWINGS AND THE PROJECT MANUAL ARE CONFIDENTIAL AND SHALL REMAIN THE SOLE PROPERTY OF STARBUCKS CORPORATION, WHICH IS THE OWNER OF THE COPYRIGHT IN THIS WORK. THEY SHALL NOT BE REPRODUCED (IN WHOLE OR IN PART), SHARED WITH THIRD PARTIES OR USED IN ANY MANNER ON OTHER PROJECTS OR EXTENSIONS TO THIS PROJECT WITHOUT THE PRIOR WRITTEN CONSENT OF STARBUCKS CORPORATION. THESE DRAWINGS AND SPECIFICATIONS ARE INTENDED TO EXPRESS DESIGN INTENT FOR A PROTOTYPICAL STARBUCKS STORE (WHICH IS SUBJECT TO CHANGE AT ANYTIME) AND DO NOT REFLECT ACTUAL SITE CONDITIONS. NEITHER PARTY SHALL HAVE ANY OBLIGATION NOR LIABILITY TO THE OTHER (EXCEPT STATED ABOVE) UNTIL A WRITTEN AGREEMENT IS FULLY EXECUTED BY BOTH PARTIES.

STARBUCKS TEMPLATE VERSION: I2023.08.28

GREGORY ROY SCHNACKEL LICENSE No PE 0048442 STATE OF FLORIDA PROFESSIONAL ENGINEER

Digitally signed by Gregory R Schnackel
Date: 2024.03.20 16:15:59-05'00'

Date: 03/20/24 COA#: 28403

Gensler

MAIN OFFICE
M. ARTHUR GENSLER JR. & ASSOCIATES
FL QUALIFIER'S LIC. NO. AR96468
220 MONTGOMERY STREET, SUITE 200
SAN FRANCISCO, CA 94104 USA
Tel: (415) 433.3700
Fax: (415) 836.4599

SATELLITE OFFICE
M. ARTHUR GENSLER JR. & ASSOCIATES
545 NW 26TH ST
SUITE 250
MIAMI, FL 33127 USA
Tel: (305) 350.7079
Fax: (305) 350.7071

PROJECT NAME: NW 43RD & 53RD

PROJECT ADDRESS: 5480 NW 43RD STREET GAINESVILLE, FL 32653

STORE #:	10820
PROJECT #:	34769-081
ISSUE DATE:	03-15-2024
DESIGN MANAGER:	
PRODUCTION DESIGNER:	SEI
CHECKED BY:	GRS

Revision Schedule

Rev	Date	By	Description

SHEET TITLE:
PLUMBING WASTE AND VENT PLAN
SCALE: AS SHOWN

SHEET NUMBER:
P102

SE JOB#: 240195

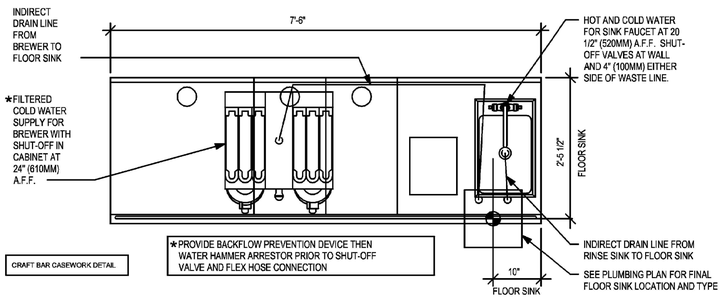

4 BRW 09-01 PLUMBING
Scale: 3/4" = 1'-0"

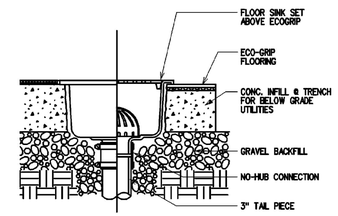

5 FLOOR SINK DETAIL
NOT TO SCALE

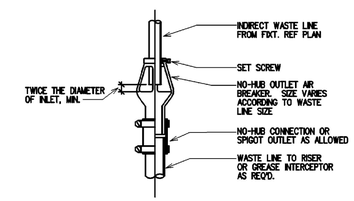

2 AIR BREAKER DETAIL
NOT TO SCALE

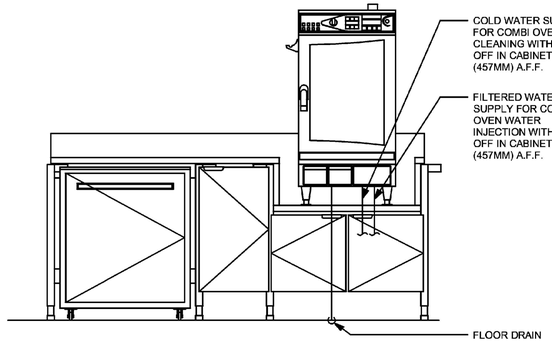

ELEVATION - PLUMBING DIAGRAM

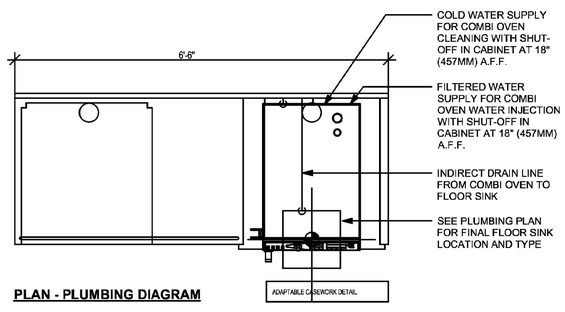

PLAN - PLUMBING DIAGRAM

7 WRM 20-01 PLUMBING
Scale: 3/4" = 1'-0"

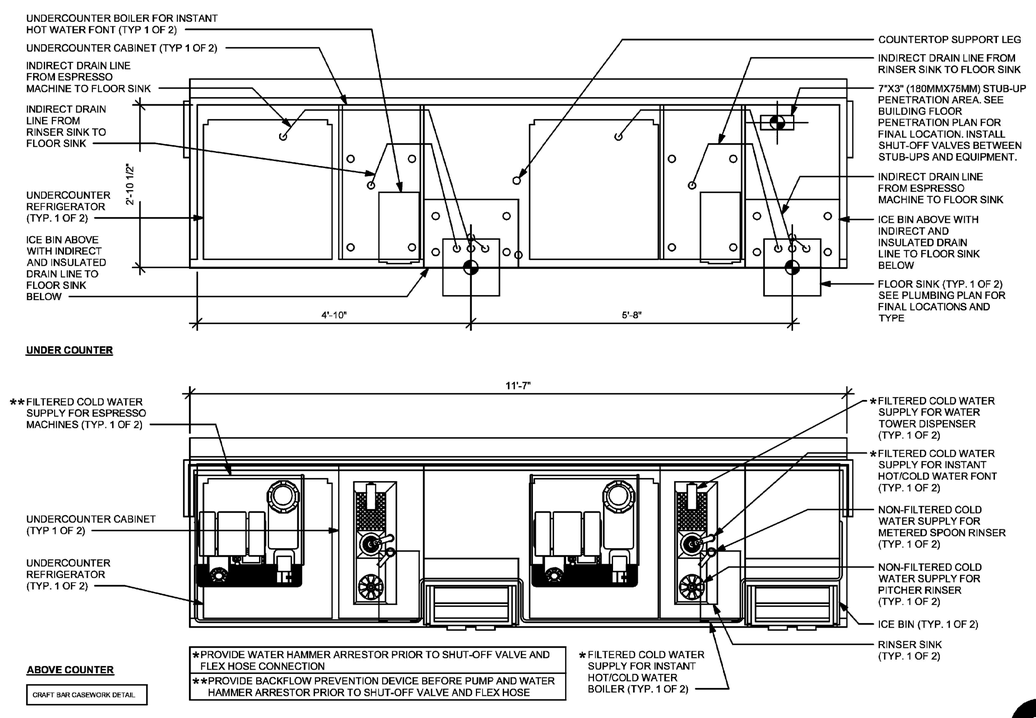

1 ESP 11-01 PLUMBING
Scale: 3/4" = 1'-0"

Schnackel engineers
New York • Miami • Orlando • Los Angeles • Seattle • Honolulu
800-581-0963 www.schnackel.com

SE JOB# 240195

PERMIT SET - FOR CONSTRUCTION USE

© 2022 STARBUCKS COFFEE COMPANY

STARBUCKS®
2401 UTAH AVENUE SOUTH
SEATTLE, WASHINGTON 98134
(206) 318-1575

THESE DRAWINGS AND THE PROJECT MANUAL ARE CONFIDENTIAL AND SHALL REMAIN THE SOLE PROPERTY OF STARBUCKS CORPORATION, WHICH IS THE OWNER OF THE COPYRIGHT IN THIS WORK. THEY SHALL NOT BE REPRODUCED (IN WHOLE OR IN PART), SHARED WITH THIRD PARTIES OR USED IN ANY MANNER ON OTHER PROJECTS OR EXTENSIONS TO THIS PROJECT WITHOUT THE PRIOR WRITTEN CONSENT OF STARBUCKS CORPORATION. THESE DRAWINGS AND SPECIFICATIONS ARE INTENDED TO EXPRESS DESIGN INTENT FOR A PROTOTYPICAL STARBUCKS STORE (WHICH IS SUBJECT TO CHANGE AT ANYTIME) AND DO NOT REFLECT ACTUAL SITE CONDITIONS. NEITHER PARTY SHALL HAVE ANY OBLIGATION NOR LIABILITY TO THE OTHER (EXCEPT STATED ABOVE) UNTIL A WRITTEN AGREEMENT IS FULLY EXECUTED BY BOTH PARTIES.

STARBUCKS TEMPLATE VERSION: i2023.08.28

GREGORY ROY SCHNACKEL LICENSE No PE 0048442 STATE OF FLORIDA PROFESSIONAL ENGINEER

Digitally signed by Gregory R Schnackel
Date: 2024.03.20 16:16:06-05'00'

Date: 03/20/24 COA#: 28403

Gensler
MAIN OFFICE
M. ARTHUR GENSLER JR. & ASSOCIATES
FL QUALIFIER'S LIC. NO. AA26488
220 MONTGOMERY STREET, SUITE 200
SAN FRANCISCO, CA 94104 USA
Tel (415) 433.3700
Fax (415) 836.4599

SATELLITE OFFICE
M. ARTHUR GENSLER JR. & ASSOCIATES
545 NW 26TH ST
S.JETE 250
MIAMI, FL 33127 USA
Tel (305) 350.7070
Fax (305) 200.7071

PROJECT NAME:
NW 43RD & 53RD

PROJECT ADDRESS:
5480 NW 43RD STREET
GAINESVILLE, FL 32653

STORE #:	10820
PROJECT #:	34769-081
ISSUE DATE:	03-15-2024
DESIGN MANAGER:	
PRODUCTION DESIGNER:	SEI
CHECKED BY:	GRS

Revision Schedule

Rev	Date	By	Description

SHEET TITLE:
PLUMBING DETAILS

SCALE: AS SHOWN

SHEET NUMBER:
P201

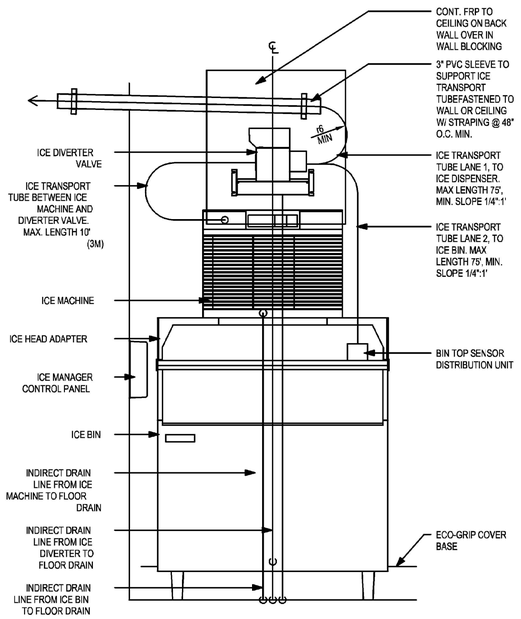

ELEVATION - PLUMBING DIAGRAM

NOTE:
INDIRECT DRAIN MIN. RADIUS = 8"
ICE TRANSPORT TUB MIN. RADIUS = 6"

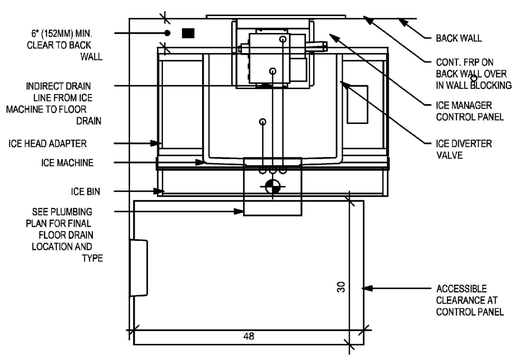

PLAN - PLUMBING DIAGRAM

NOTE:
INDIRECT DRAIN MIN. RADIUS = 8"
ICE TRANSPORT TUB MIN. RADIUS = 6"

2 NUGGET ICE - PEDESTAL STACK
Scale: 3/4" = 1'-0"

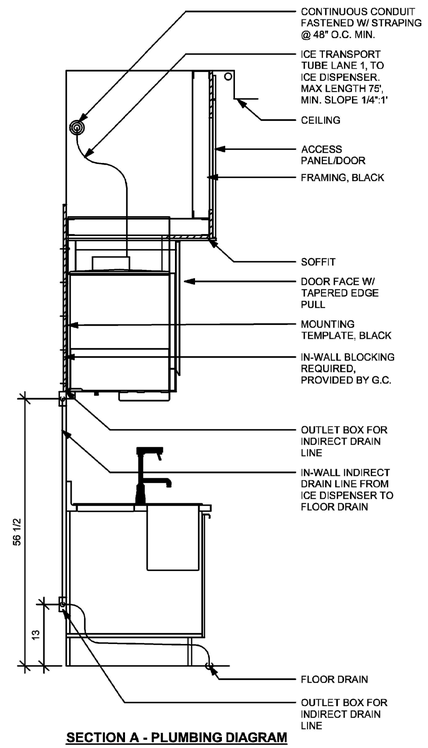

SECTION A - PLUMBING DIAGRAM

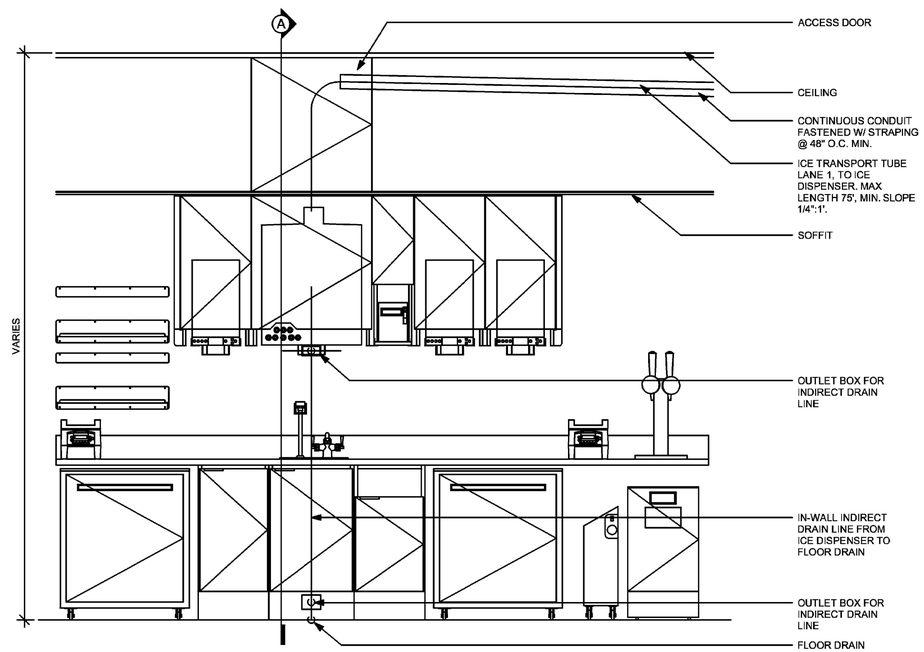

ELEVATION - PLUMBING DIAGRAM

ADAPTABLE CASEWORK DETAIL

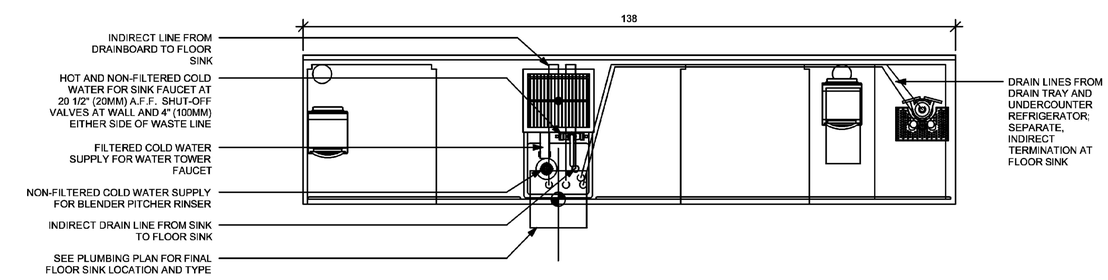

1 AC CBE 16 PLUMBING
Scale: 3/4" = 1'-0"

Schnackel engineers
Your Global Mark is Original Lux Studios & Schnackel Engineers
800-581-0963 www.schnackel.com

SE JOB#: 240195

CONSTRUCTION USE

PERMIT SET - FOR CO

© 2022 STARBUCKS COFFEE COMPANY

STARBUCKS®
2401 UTAH AVENUE SOUTH
SEATTLE, WASHINGTON 98134
(206) 318-1575

THESE DRAWINGS AND THE PROJECT MANUAL ARE CONFIDENTIAL AND SHALL REMAIN THE SOLE PROPERTY OF STARBUCKS CORPORATION, WHICH IS THE OWNER OF THE COPYRIGHT IN THIS WORK. THEY SHALL NOT BE REPRODUCED (IN WHOLE OR IN PART), SHARED WITH THIRD PARTIES OR USED IN ANY MANNER ON OTHER PROJECTS OR EXTENSIONS TO THIS PROJECT WITHOUT THE PRIOR WRITTEN CONSENT OF STARBUCKS CORPORATION. THESE DRAWINGS AND SPECIFICATIONS ARE INTENDED TO EXPRESS DESIGN INTENT FOR A PROTOTYPICAL STARBUCKS STORE (WHICH IS SUBJECT TO CHANGE AT ANYTIME) AND DO NOT REFLECT ACTUAL SITE CONDITIONS. NEITHER PARTY SHALL HAVE ANY OBLIGATION NOR LIABILITY TO THE OTHER (EXCEPT STATED ABOVE) UNTIL A WRITTEN AGREEMENT IS FULLY EXECUTED BY BOTH PARTIES.

STARBUCKS TEMPLATE VERSION: i2023.08.28

GREGORY ROY SCHNACKEL LICENSE No PE 0048442 STATE OF FLORIDA PROFESSIONAL ENGINEER

Digitally signed by Gregory R Schnackel
Date: 2024.03.20 16:16:14-05'00'

Date: 03/20/24 COA#: 28403

Gensler

MAIN OFFICE
M. ARTHUR GENSLER JR. & ASSOCIATES
FL QUALIFIERS LIC. NO. AA26488
220 MONTGOMERY STREET, SUITE 200
SAN FRANCISCO, CA 94104 USA
Tel (415) 433.3700
Fax (415) 836.4599

SATELLITE OFFICE
M. ARTHUR GENSLER JR. & ASSOCIATES
540 NW 26TH ST
SUITE 250
MIAMI, FL 33127 USA
Tel (305) 350.7079
Fax (305) 350.7071

PROJECT NAME:
NW 43RD & 53RD

PROJECT ADDRESS:
5480 NW 43RD STREET
GAINESVILLE, FL 32653

STORE #:	10820
PROJECT #:	34769-081
ISSUE DATE:	03-15-2024
DESIGN MANAGER:	
PRODUCTION DESIGNER:	SEI
CHECKED BY:	GRS

Revision Schedule

Rev	Date	By	Description

SHEET TITLE:
PLUMBING DETAILS

SCALE: AS SHOWN

SHEET NUMBER:
P202

KEYED NOTES:

1. WATER HAMMER ARRESTORS SHALL BE SIZED AND INSTALLED IN ACCORDANCE WITH THE MANUFACTURER'S RECOMMENDATIONS. LOCATIONS SHOWN ARE FOR REFERENCE PURPOSES ONLY.

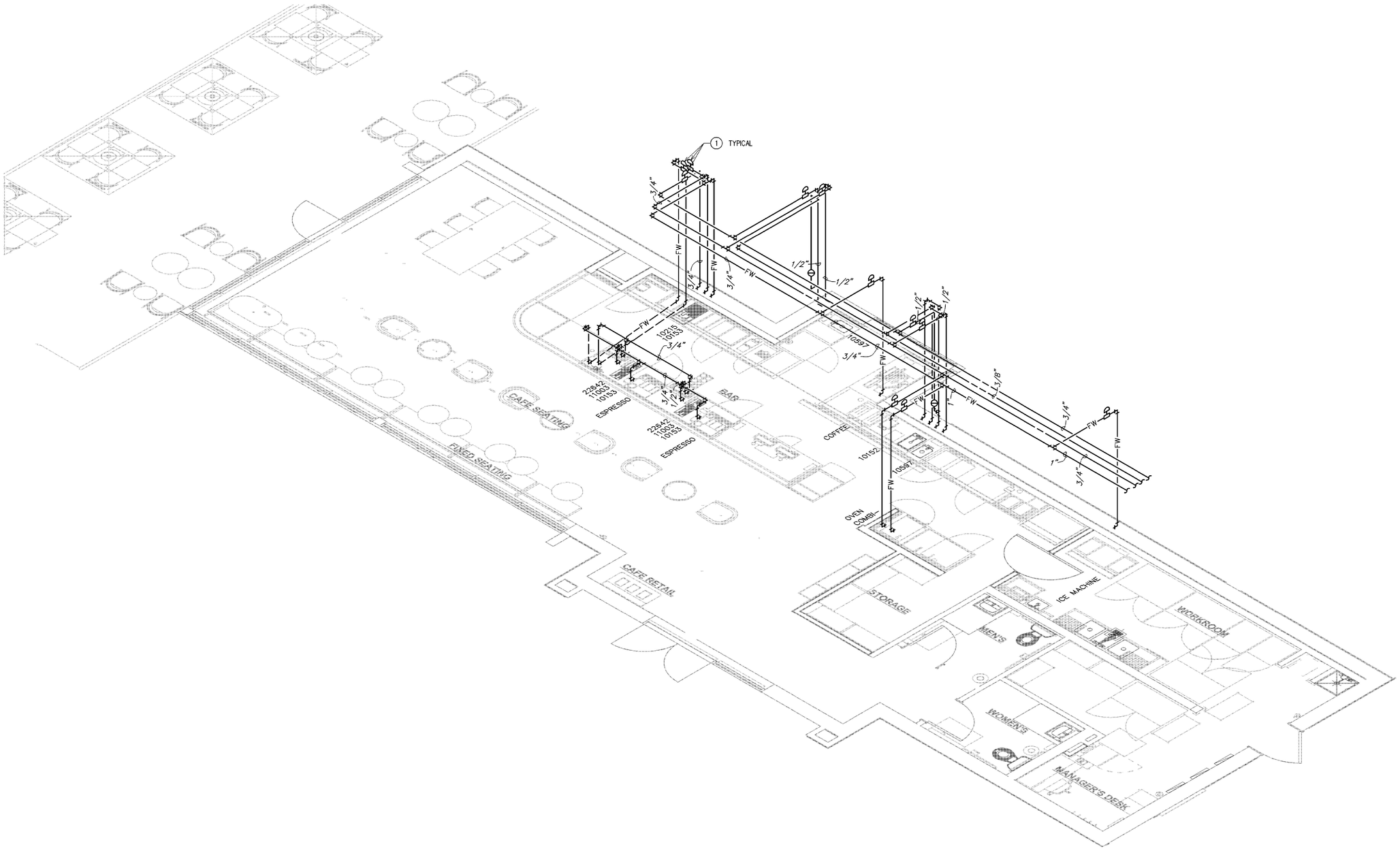

1 SUPPLY RISER DIAGRAM
NOT TO SCALE

Schnackel engineers
New Orleans • Marina Ornelas • Los Angeles • Seattle • Honolulu
803-581-0963 www.schnackel.com

PERMIT SET - FOR CONSTRUCTION USE

© 2022 STARBUCKS COFFEE COMPANY

STARBUCKS®
2401 UTAH AVENUE SOUTH
SEATTLE, WASHINGTON 98134
(206) 318-1575

THESE DRAWINGS AND THE PROJECT MANUAL ARE CONFIDENTIAL AND SHALL REMAIN THE SOLE PROPERTY OF STARBUCKS CORPORATION, WHICH IS THE OWNER OF THE COPYRIGHT IN THIS WORK. THEY SHALL NOT BE REPRODUCED (IN WHOLE OR IN PART), SHARED WITH THIRD PARTIES OR USED IN ANY MANNER ON OTHER PROJECTS OR EXTENSIONS TO THIS PROJECT WITHOUT THE PRIOR WRITTEN CONSENT OF STARBUCKS CORPORATION. THESE DRAWINGS AND SPECIFICATIONS ARE INTENDED TO EXPRESS DESIGN INTENT FOR A PROTOTYPICAL STARBUCKS STORE (WHICH IS SUBJECT TO CHANGE AT ANYTIME) AND DO NOT REFLECT ACTUAL SITE CONDITIONS. NEITHER PARTY SHALL HAVE ANY OBLIGATION NOR LIABILITY TO THE OTHER (EXCEPT STATED ABOVE) UNTIL A WRITTEN AGREEMENT IS FULLY EXECUTED BY BOTH PARTIES.

STARBUCKS TEMPLATE VERSION: I2023.08.28

GREGORY ROY SCHNACKEL
LICENSE
No PE 0048442
STATE OF FLORIDA
PROFESSIONAL ENGINEER

Digitally signed by Gregory R Schnackel
Date: 2024.03.20 16:16:22-05'00'

Date: 03/20/24 COA#: 28403

Gensler

MAIN OFFICE
M. ARTHUR GENSLER JR. & ASSOCIATES
FL QUALIFIERS LIC. NO. AA26048
220 MONTGOMERY STREET, SUITE 200
SAN FRANCISCO, CA 94104 USA
Tel (415) 433.3700
Fax (415) 836.4599

SATELLITE OFFICE
M. ARTHUR GENSLER JR. & ASSOCIATES
545 NW 26TH ST
SUITE 250
MIAMI, FL 33127 USA
Tel (305) 350.7079
Fax (305) 350.7071

PROJECT NAME:
NW 43RD & 53RD

PROJECT ADDRESS:
5480 NW 43RD STREET
GAINESVILLE, FL 32653

STORE #:	10820
PROJECT #:	34769-081
ISSUE DATE:	03-15-2024
DESIGN MANAGER:	
PRODUCTION DESIGNER:	SEI
CHECKED BY:	GRS

Revision Schedule

Rev	Date	By	Description

SHEET TITLE:
PLUMBING RISER DIAGRAM
SCALE: AS SHOWN

SHEET NUMBER:
P301

SE JOB#: 246195

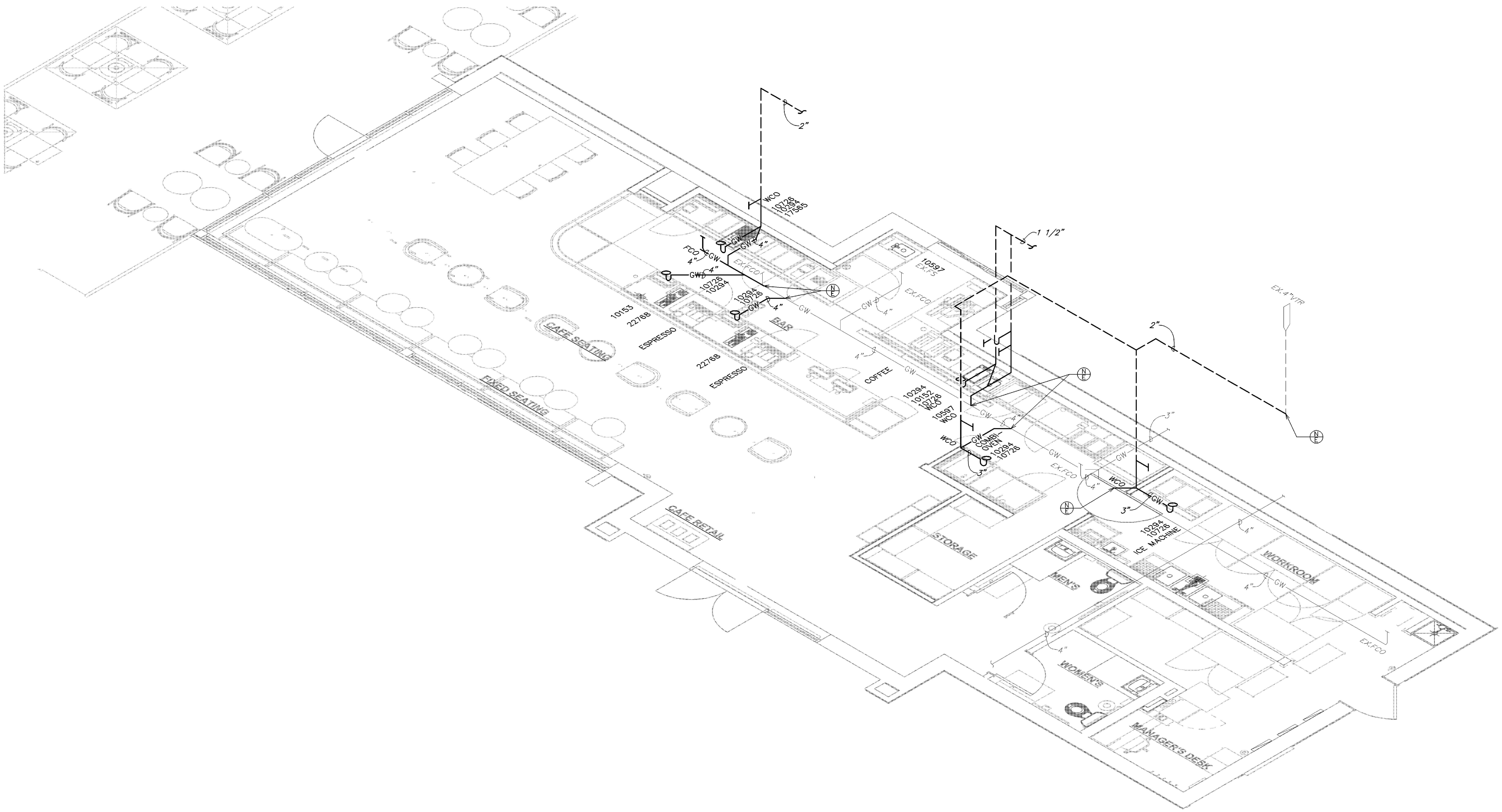

1 WASTE AND VENT RISER DIAGRAM
NOT TO SCALE

LEGEND	
——	EXISTING
——	NEW WORK
(N/E)	NEW TO EXISTING CONNECTION

Schnackel engineers
New York ■ Miami ■ Omaha ■ Los Angeles ■ Seattle ■ Honolulu
800-581-0963 www.schnackel.com

SE JOB#: 240195

PERMIT SET - FOR CONSTRUCTION USE

© 2022 STARBUCKS COFFEE COMPANY

STARBUCKS®
2401 UTAH AVENUE SOUTH
SEATTLE, WASHINGTON 98134
(206) 318-1575

THESE DRAWINGS AND THE PROJECT MANUAL ARE CONFIDENTIAL AND SHALL REMAIN THE SOLE PROPERTY OF STARBUCKS CORPORATION, WHICH IS THE OWNER OF THE COPYRIGHT IN THIS WORK. THEY SHALL NOT BE REPRODUCED (IN WHOLE OR IN PART), SHARED WITH THIRD PARTIES OR USED IN ANY MANNER ON OTHER PROJECTS OR EXTENSIONS TO THIS PROJECT WITHOUT THE PRIOR WRITTEN CONSENT OF STARBUCKS CORPORATION. THESE DRAWINGS AND SPECIFICATIONS ARE INTENDED TO EXPRESS DESIGN INTENT FOR A PROTOTYPICAL STARBUCKS STORE (WHICH IS SUBJECT TO CHANGE AT ANYTIME) AND DO NOT REFLECT ACTUAL SITE CONDITIONS. NEITHER PARTY SHALL HAVE ANY OBLIGATION NOR LIABILITY TO THE OTHER (EXCEPT STATED ABOVE) UNTIL A WRITTEN AGREEMENT IS FULLY EXECUTED BY BOTH PARTIES.

STARBUCKS TEMPLATE VERSION: i2023.08.28

GREGORY ROY SCHNACKEL
LICENSE
No PE 0048442
STATE OF FLORIDA
PROFESSIONAL ENGINEER

Digitally signed by Gregory R Schnackel
Date: 2024.03.20 16:16:29-05'00'

Date: 03/20/24 COA#: 28403

Gensler

MAIN OFFICE
M. ARTHUR GENSLER JR. & ASSOCIATES
FL QUALIFIER'S LIC. NO. AR96486
220 MONTGOMERY STREET, SUITE 200
SAN FRANCISCO, CA 94104 USA
Tel (415) 433.3700
Fax (415) 836.4599

SATELLITE OFFICE
M. ARTHUR GENSLER JR. & ASSOCIATES
545 NW 26TH ST
SUITE 250
MIAMI, FL 33127 USA
Tel (305) 350.7070
Fax (305) 350.7071

PROJECT NAME:
NW 43RD & 53RD

PROJECT ADDRESS:
5480 NW 43RD STREET
GAINESVILLE, FL 32653

STORE #:	10820
PROJECT #:	34769-081
ISSUE DATE:	03-15-2024
DESIGN MANAGER:	
PRODUCTION DESIGNER:	SEI
CHECKED BY:	GRS

Revision Schedule

Rev	Date	By	Description

SHEET TITLE:
PLUMBING RISER DIAGRAM
SCALE: AS SHOWN

SHEET NUMBER:
P302